PureAire Monitoring Systems
O_2 Deficiency Monitors

Instruction Manual

For models
DRA (99016/99116)
Remote DRA (99028/99145/99117/99121/99166/99171)
KF-25 DRA (99035/99128)

PureAire Monitoring Systems, Inc.
1140 Ensell Road
Lake Zurich, Illinois 60047
Phone: +1 (847) 726-6000
Fax: +1 (847) 726-6051
Toll-Free: +1 (888) 788-8050
24/7 Emergency: +1 (224) 443-5445
Pureairemonitoring.com
Rev 5.02, July 30, 2026

Welcome to PureAire Monitoring Systems

I would like to thank you for investing in our continuous life safety and process control toxic gas monitoring systems.

PureAire offers an unbeatable combination of experience and innovation in solving the safety and environmental needs of our customers. We can provide small systems of a few points, to a total multi-point turnkey computerized package.

PureAire's proprietary sensor cell technology and state-of-the-art electronics are designed to interface with the latest distributive or PLC based control systems. We believe that our experience, innovative products, and commitment to service will satisfy your specific monitoring needs now, and in the future.

Our growth is a result of our total commitment to supporting our customers. We are available 24 hours a day, 7 days a week to help you when you need us. Our 24-hour Emergency phone number is +1 (224)443-5445. We can provide field service recommendations, preventative maintenance programs and training to your technicians in the operation of our equipment. Our goal is to provide the best after-sales service and support in the industry. That is just one way PureAire takes that extra step to ensure your complete satisfaction.

Thank you again for investing in PureAire Monitoring Systems for your monitoring needs and I am proud to welcome you to our family of valued and satisfied customers.

Sincerely,

Albert A. Carrino
President

© 2023 PureAire Monitoring Systems, Inc.

Table of Contents

PureAire Monitoring Systems O_2 Deficiency Monitors 1
1: Introduction 6
1.1 Key Features 6
1.1.1 Long Life Zirconium Oxide O_2 Sensor 6
1.1.2 Smart Electronics 6
1.1.3 Sensor Adjustment 6
1.1.4 Factory Reset 7
1.1.5 AutoSpan Function 7
1.2 Component Identification 8
1.2.1 Local Monitors 8
1.2.2 Remote Monitors 9
1.2.3 KF-25 Monitors 9
1.2.4 Joystick Board 10
1.2.5 Relay Board 10
2: Specifications 11
2.1 Performance Specifications 11
2.2 Gas Detection System 11
2.3 Signal Outputs 11
2.4 Electrical Requirements 11
2.5 Physical Characteristics 11
2.6 Default Factory Settings 12
3: Installation 13
3.1 Site Requirements 13
3.2 Mounting 13
3.2.1 DRA Enclosure Dimensions 13
3.2.2 Remote Sensor Housing Dimensions 14
3.2.3 KF-25 Flange Dimensions 14
3.2.4 Installation Guidance 14
3.3 Wiring 14
3.3.1 Power to Monitor 15
3.3.2 Relay Board Connections 15
4: Normal Operation 16
4.1 Signal Outputs 16

© 2023 PureAire Monitoring Systems, Inc.

4.2 Instrument Faults 16
4.3 Routine Maintenance Schedule 16
4.4 Loss of Power Indication 17
4.5 Alarm Reset 17
5: Monitor Programming 18
5.1 Joystick Operation 18
5.2 Overall Program Flowchart 19
5.2.1 Top Level Menu Navigation 19
5.3 Entering Password 20
5.4 Changing the User Password 20
5.5 Setting 4-20mA Loop 21
5.6 Setting Relay Formats 21
5.7 Setting Alarm Polarity 22
5.8 Setting Alarm Latching 23
5.9 Sensor Adjustment Menus 24
5.10 AutoSpan Menus 25
5.11 Factory Reset Menus 26
5.12 Setting Alarm Hysteresis 27
5.12.1 Hysteresis 27
5.13 Setting Alarm Thresholds 28
5.14 Setting Alarm Delay 29
6: Maintenance & Sensor Verification 30
6.1 Sensor Verification ..... **Error! Bookmark not defined.**
6.1.1 Sensor Verification Gas ..... **Error! Bookmark not defined.**
6.1.2 Sensor Verification Equipment ..... **Error! Bookmark not defined.**
6.2 Sensor Functionality Verification Procedure ..... **Error! Bookmark not defined.**
6.3 Ambient Oxygen Level Verification ..... **Error! Bookmark not defined.**
6.4 AutoAdjust Functions 33
6.4.1 Monitor AutoSpan 33
6.4.2 Reset AutoCal to Factory Settings 34
6.5 Manual Monitor Span Adjustment 34

© 2023 PureAire Monitoring Systems, Inc.

PLEASE READ BEFORE INSTALLATION

The following environmental conditions **WILL DAMAGE** the Oxygen Monitor

1. The PureAire Monitor requires **24 VDC regulated power ONLY**. **DO NOT** connect the monitor to >24 VDC, or **ANY AC Voltage**.

2. **DO NOT power** the monitor **without the sensor attached** to the main assembly. **DO NOT disconnect/reconnect sensor** while monitor is powered.

3. Each sensor cell is matched specifically to each monitor. **NEVER exchange sensors and monitors**.

4. Flows rates above **500 cc/min (0.5 LPM)** may lead to inaccurate readings. Flow rates **above 1 LPM will cool the sensor** and yield inaccurate readings.

5. **Calibration gases** should be blends consisting of **Oxygen and Nitrogen ONLY**. DO NOT expose the monitor to any combustible gas (Methane, Hydrogen, etc.). **Combustible gas exposure will quickly damage the cell**.

6. **NEVER expose** the sensing element to compounds consisting of **Silicone, Freon, or corrosive compounds**. Exposure will quickly, **irreversibly damage** the cell causing an extreme loss in sensitivity.

7. When using the monitor, DO NOT expose the oxygen sensor directly to a water stream. In areas requiring wash downs, cover and protect the monitor and power supply. Contact PureAire for details on waterproof enclosures.

The Password for entering the menus is 557.

© 2023 PureAire Monitoring Systems, Inc.

1: Introduction

The Air Check O_2 Deficiency Monitor is a compact and efficient system for continuous oxygen level monitoring in confined spaces or areas with inert gases. Unaffected by fluctuating temperature or humidity levels, the device's robust zirconium sensor provides accurate and stable oxygen readings. Suitable for both indoor and outdoor use, the monitor is factory calibrated against NIST standards and carries UL, CUL, and Ce certifications.

The system's centerpiece is a durable zirconium sensor that reacts quickly to low oxygen levels, offering precise measurements across a broad temperature and humidity spectrum. Designed for minimal maintenance, this sensor is expected to work seamlessly for **10+ years**, and unlike disposable sensors, it eliminates the need for frequent calibration, with no zero or span pots, saving significant maintenance time and costs.

Each system consists of a long-life zirconium oxide sensor cell and three-wire transmitter. Whether used as a stand-alone gas detector or connected to PureAire's single or multipoint controllers, or even a centralized control system, the Air Check O_2 Monitor maintains its sensitivity and accuracy irrespective of the weather or temperature. Its electronics are safely encased in a NEMA 2 housing. This manual will guide you through the installation, operation, and upkeep of the Air Check O_2 deficiency monitor.

1.1 Key Features

The Air Check O_2 Deficiency Monitor is designed with an array of innovative features that facilitate ease of use and efficient operation. These unique characteristics have been thoughtfully incorporated to streamline the installation process, optimize daily functionality, and minimize maintenance needs. By fusing cutting-edge technology with user-centric design, the monitor delivers reliable performance while ensuring a simplified user experience.

1.1.1 Long Life Zirconium Oxide O_2 Sensor

The Air Check O_2 Deficiency Monitor features a durable zirconium oxide O_2 sensor with over 10 years of continuous operation life. Uniquely designed by PureAire, this sensor can accurately detect low oxygen levels in confined spaces and process tools without needing a reference gas, setting it apart from conventional concentration O_2 cells.

1.1.2 Smart Electronics

The monitor integrates a specialized electronic circuit to continuously oversee the sensor's operation. This advanced circuitry can promptly identify any sensor degradation or failure, alerting the user to any sensor faults or electrical issues that might disrupt surveillance via the standard mA signal output or the optional fault relay.

1.1.3 Sensor Adjustment

The device uses a stable zirconium oxide sensor that requires minimal adjustment. Environmental factors like changes in barometric pressure, temperature, and humidity do not affect the sensor's performance. It can easily visually verify the Earth's 20.9% oxygen level under ambient conditions, without the need for any zero or span pot adjustments. Periodic nitrogen testing is all that's needed to verify the cell's response to low oxygen levels.

© 2023 PureAire Monitoring Systems, Inc.

1.1.4 Factory Reset

Introduced in the Version 5.0 update, the factory reset feature allows users to return the monitor to its original state as per the factory calibration certificate, enhancing the usability and convenience of the system.

1.1.5 AutoSpan Function

Also added in the Version 5.0 update, the AutoSpan function enables automatic span adjustment to 20.9% oxygen, eliminating the need for manual adjustments and further simplifying the user's experience.

Further details about the factory reset and AutoSpan function will be provided later in the manual.

© 2023 PureAire Monitoring Systems, Inc.

1.2 Component Identification

1.2.1 Local Monitors

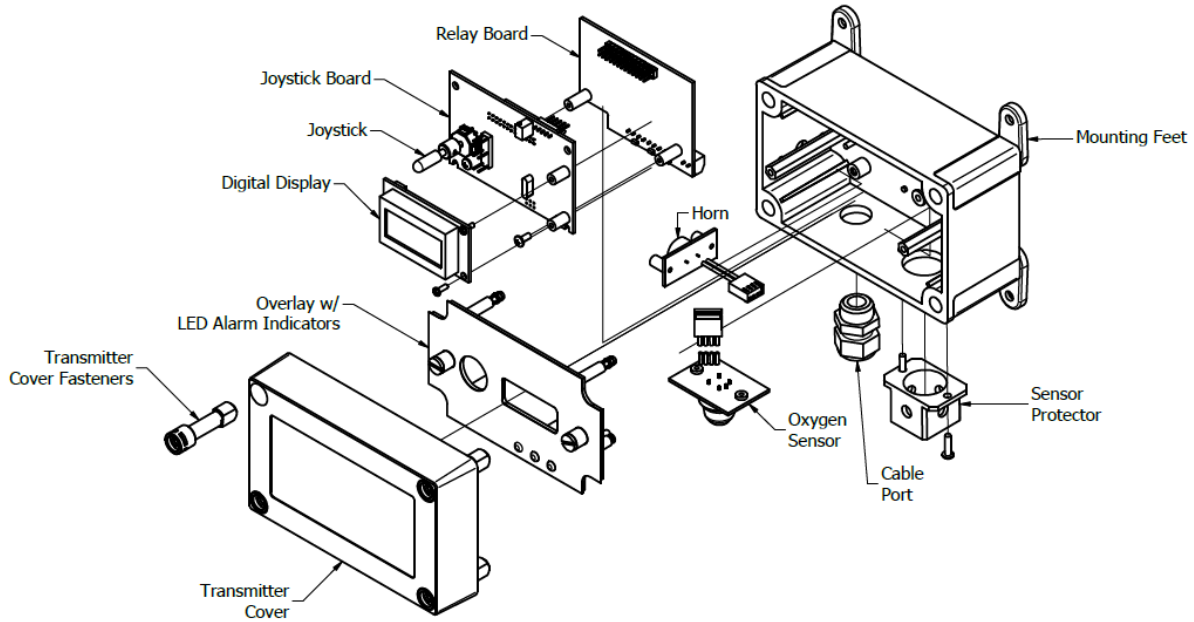

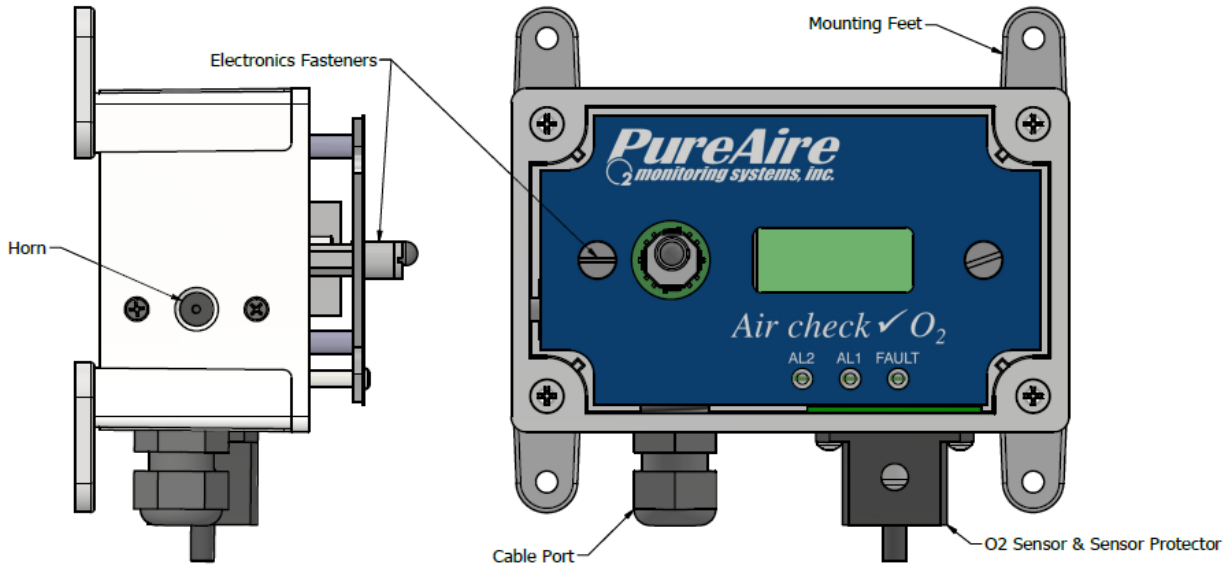

© 2023 PureAire Monitoring Systems, Inc.

1.2.2 Remote Monitors

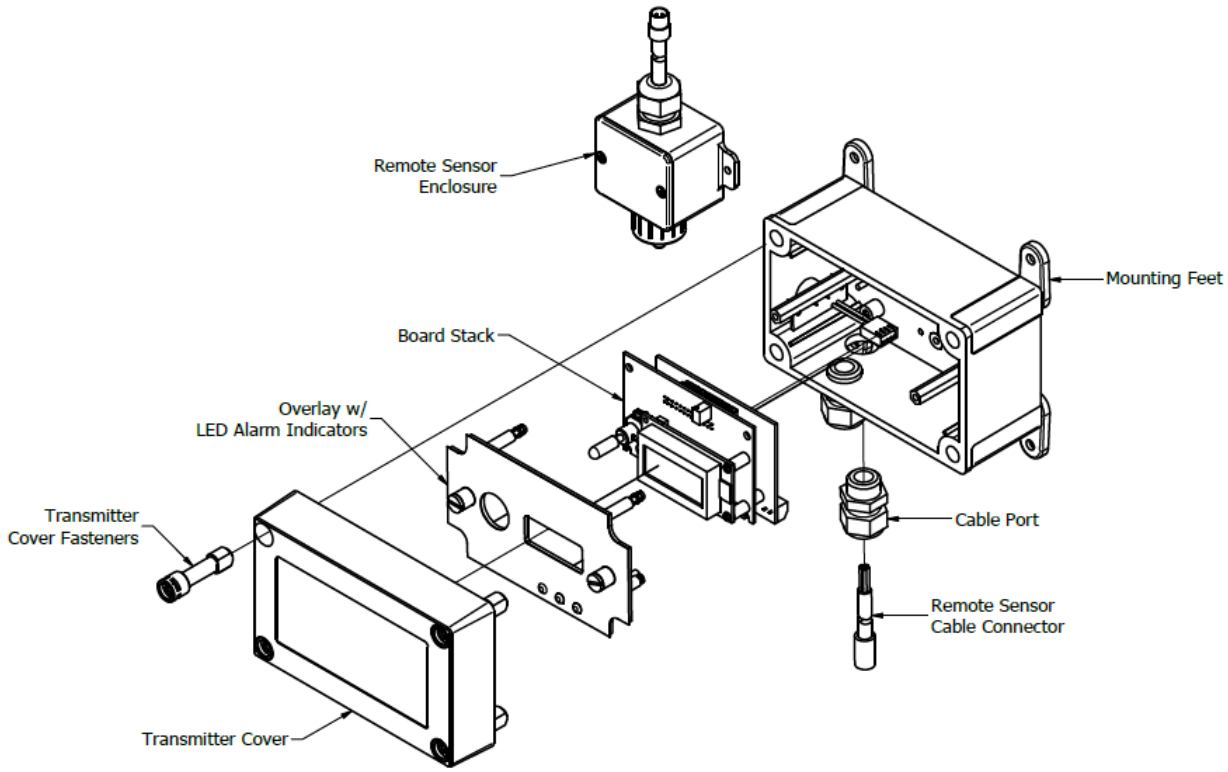

1.2.3 KF-25 Monitors

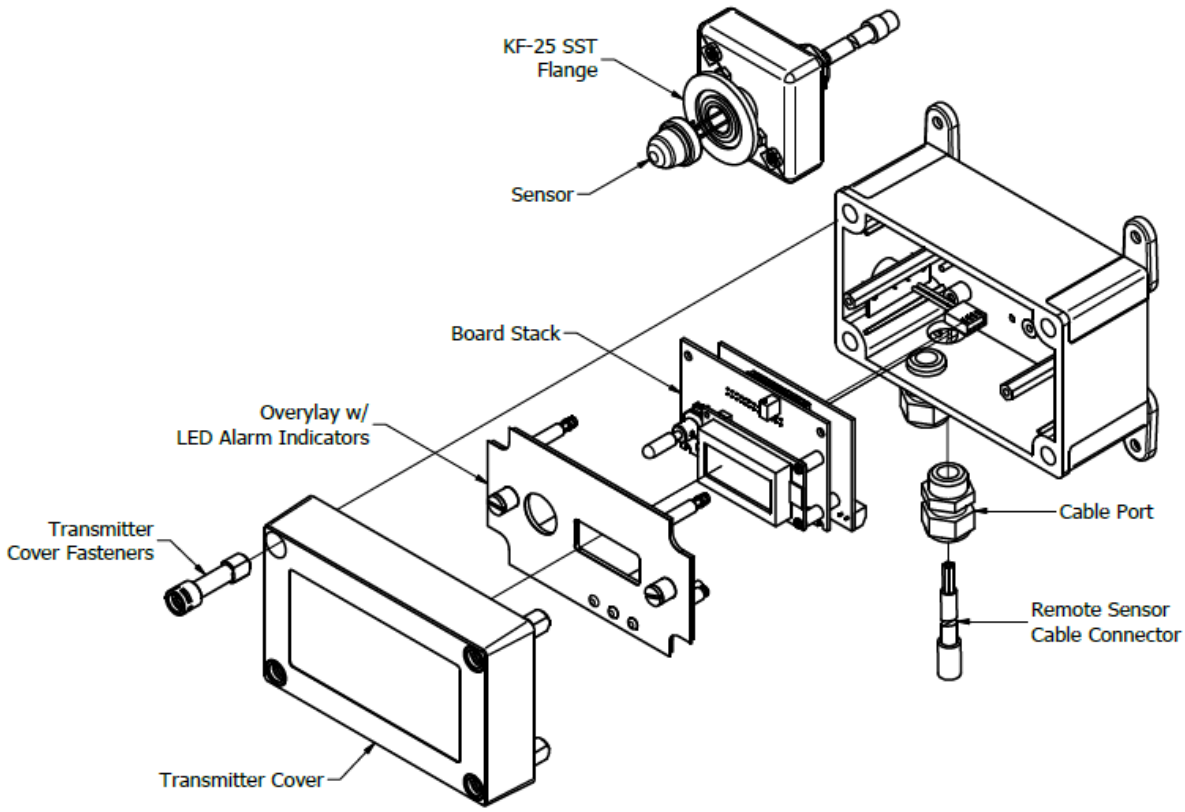

© 2023 PureAire Monitoring Systems, Inc.

1.2.4 Joystick Board

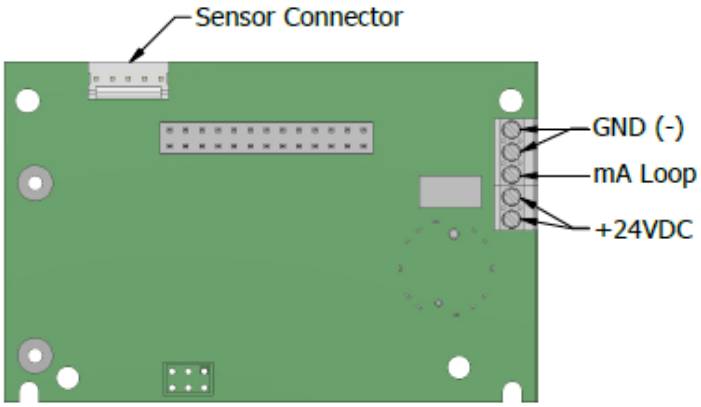

1.2.5 Relay Board

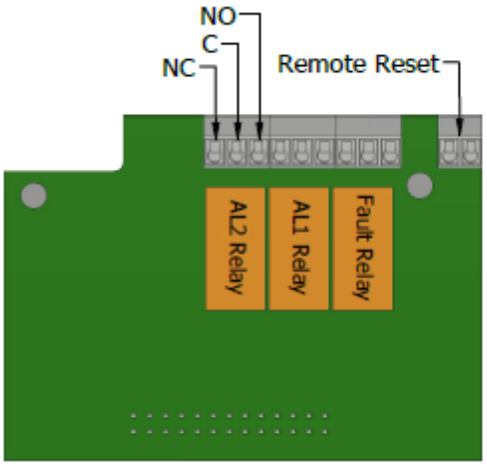

NC: Normally Closed
C: Common
NO: Normally Open

© 2023 PureAire Monitoring Systems, Inc.

2: Specifications

NOTE: *For our continual product improvement, all specifications are subject to change without notice*

2.1 Performance Specifications

Sensor Type:	Long-Life Zirconium Oxide Sensor Cell. 0-25%/0-30%/0-95%
Response Time:	Swift response within 1 second to any O_2 level change.
Accuracy:	Delivers ±0.2% O_2 accuracy. (±1% of full range)
Fault Indicators:	Loss of VDC power (analog signal drops to 0 mA). Sensor cell failure: Fault relay activated.
Operating Cond.:	-40° to 134°F (-40° to 55°C) 0 to 95% RH
UL/CUL Listing:	Measuring Equipment E363306
Ce:	EN 61000-3-2:2006 EMC, EN 61000-3-3:2008 EMC, EN61010-1-3-2013 LVD

2.2 Gas Detection System

Type and Life:	Long-Life Zirconium Oxide Sensor cell with a lifespan of 10+ years under normal conditions.
Transmitter:	Features a microprocessor with a built-in 3-digit backlit LCD display and joystick-operated menus for easy navigation.

2.3 Signal Outputs

Local Display:	Offers a digital display, calibrated for Oxygen, which can be accessed and managed via the joystick. In measurement mode, pushing the joystick down will toggle between scrolling the gas and range and just the gas.
Standard Analog:	Provides DC 4-20 mA output. (RS-485 Optional)
Relay Output:	Includes dual-level user-selectable alarm relays and one fault relay, all rated at 2amps @ ≤ 24VDC.

2.4 Electrical Requirements

Power:	24VDC external power. A regulated 24VDC power supply is required.
Consumptions:	Approx. 250mA

2.5 Physical Characteristics

Dimensions:	5.125 (W) x 3.15 (H) x 3.00 (D) inches; 130 x 80 x 76 mm (Max w/ feet)
Weight:	1.1 pounds (0.5 kg)
Enclosure Type:	General purpose NEMA 2 housing; not intended for explosive atmospheres.

© 2023 PureAire Monitoring Systems, Inc.

2.6 Default Factory Settings

The Air Check O_2 Monitor is shipped with factory defaults that are saved to the memory of the unit. Factory resettable functions are denoted by †.

Menu	Factory Default	Definition
Set 4-20mA Loop†	mA output is individually set at the factory using a calibrated Fluke meter.	Use this function to adjust the Oxygen monitors 4 mA (Zero), and 20 mA (Span) analog output
Set Formats†	Alarm 1 = Normal Alarm 2 = Normal Fault = Normal	When alarm activates, the relays should energize (Normal), or de-energize (Inverted)
Set Polarity†	Alarm 1 = Inverted Alarm 2 = Inverted Audio = Inverted*	Alarm should activate above specified concentration (Normal), or when lower (Inverted) than the alarm thresholds
Set Latching†	Alarm 1 = Non-latching Alarm 2 = Non-latching Fault = Non-latching	Automatic alarm reset (non-latching), or manual alarm reset (latching)
Alarm Delay†	Alarm = 5 Seconds	Delay until alarm is activated
Zero Suppression	—	NOT ENABLED ON O2 MONITOR
Set Alarm Thresholds†	Alarm 1 = 19.5% Alarm 2 = 18.0% Audio = 19.5%*	Alarm levels
Set Alarm Hysteresis†	Alarm 1 = 0.0% Alarm 2 = 0.0% Audio = 0.0%*	Deadzone setting, more information in Section 5
Sensor Adjustment†	Monitors are individually calibrated at the factory using NIST traceable gas mixtures	For manual span adjustment or dynamic calibration (w/ known span gas) of Oxygen monitor
Manage Passwords	Factory Default is **557**	For changing the password from factory default to a new password

*NOTE: The Audio alarm feature is optional

The LED indicators on the front panel are connected directly to the alarm relays.

© 2023 PureAire Monitoring Systems, Inc.

3: Installation

3.1 Site Requirements

The Air Check O_2 monitor should ideally be placed in an area free from excessive vibration and electrical noise or interference. Areas with high temperatures or high humidity should be avoided. When installed on a wall, the monitor effectively covers an area of about 692 ft^2. This coverage is approximately a circle with a radius of around 15 ft, assuming an ideal and uniform gas dispersion in an open space.

For optimal safety and effectiveness, the Air Check O_2 monitor should ideally be situated as close as possible to potential leak sources, such as gas lines, gas cylinders, or other areas prone to gas leaks. While the monitor should not be placed more than 21 ft away from these potential leak points, positioning it closer enhances its ability to promptly detect changes in oxygen levels. When considering placement, various factors may have to be examined such as expected gas dispersion patterns, the monitor's sensitivity, and required safety margins. Therefore, the closer the monitor is to the potential source of a leak, the more effective it will be in providing timely alerts.

Furthermore, if multiple monitors are installed on the same wall, the maximum distance between two units should not exceed 30 ft for optimal safety and monitoring efficiency. However, actual coverage could be influenced by many environmental factors.

WARNING: *The Air Check O2 monitor is NOT designed for installation in hazardous areas. Consult PureAire for information on enclosures for use in hazardous environments.*

3.2 Mounting

3.2.1 DRA Enclosure Dimensions

The following is a drawing of the mounting dimensions for the monitor housing.

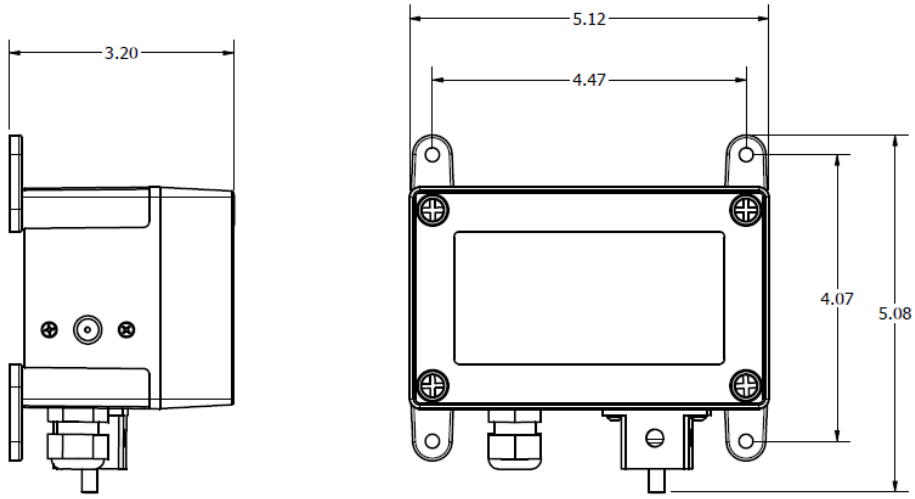

© 2023 PureAire Monitoring Systems, Inc.

3.2.2 Remote Sensor Housing Dimensions

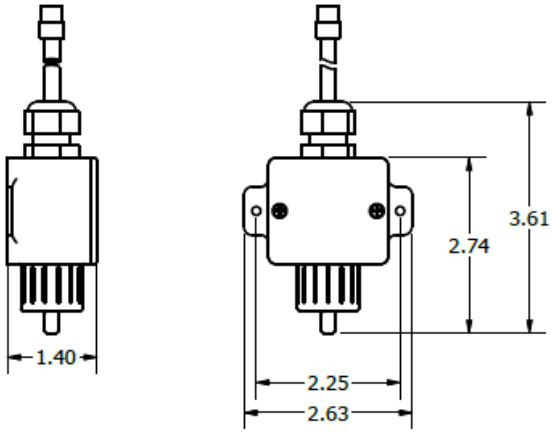

3.2.3 KF-25 Flange Dimensions

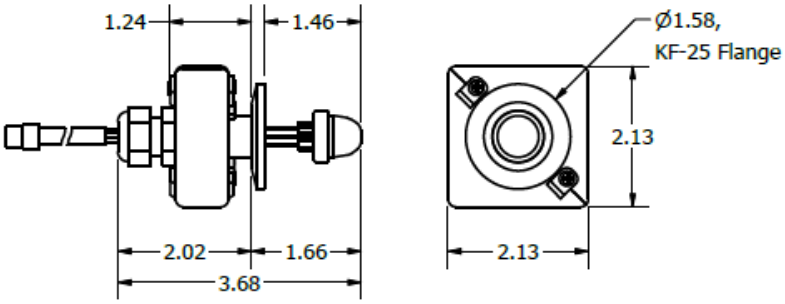

3.2.4 Installation Guidance

The Air Check monitor is designed primarily for wall mounting and should be installed at a height convenient for operation, maintenance, and viewing of the instrument's digital display.

Choose a location for the transmitter and sensor where potential gas leaks could occur or where any released gases might tend to gather. The installation should not be less than 12 inches above the floor level. **Consider factors such as air circulation patterns within the area to be monitored, the properties of the gas (whether it's lighter or heavier than air), and the placement of workstations and staff when deciding on the optimal installation site.**

3.3 Wiring

The Air Check O_2 monitor necessitates a singular, triple-conductor shielded cable for the purpose of analog output and 24 VDC power input. It's recommended to employ a three-wire shielded cable, ideally of 18 AWG stranded, such as the General Cable E2203S.30.860 or an equivalent. The connections for analog output and VDC power input are to be made on the internal terminal block located within the transmitter housing.

Note that all PureAire monitors, except for explosion proof monitors, come with a pre-installed plug-in power supply.

© 2023 PureAire Monitoring Systems, Inc.

3.3.1 Power to Monitor

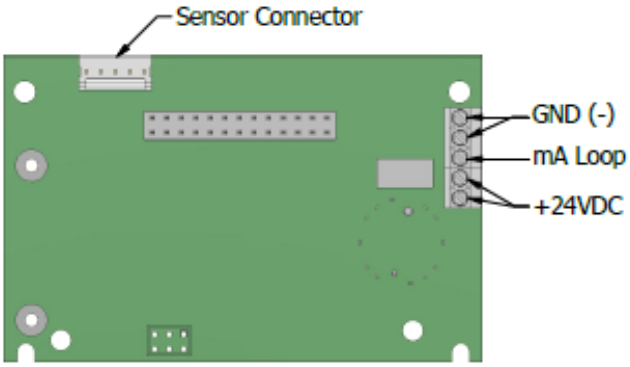

Caution: DO NOT connect to a powered current loop receiver. The Air Check Oxygen monitor supplies the current loop power.

DO NOT disconnect or reconnect the sensor when monitor is powered on.

3.3.2 Relay Board Connections

****Please Note: An 18 AWG, three conductor, shielded control and instrumentation cable, Belden 8770 or equivalent, is recommended for the connection.**

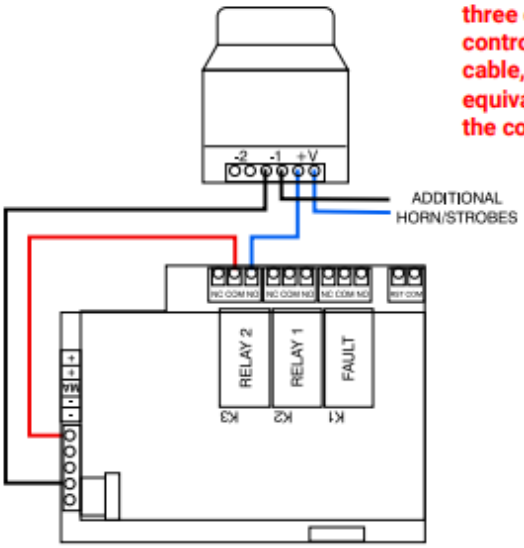

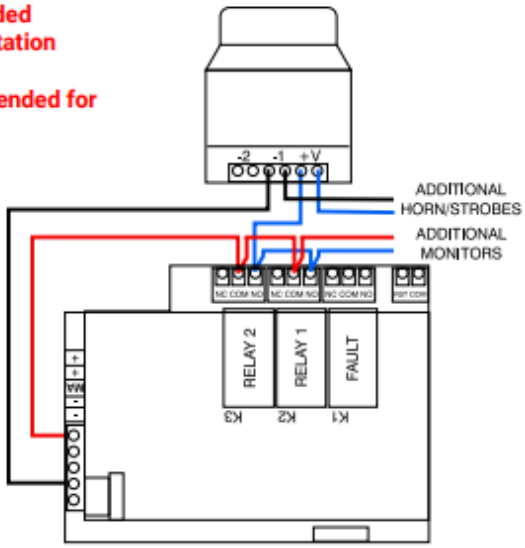

© 2023 PureAire Monitoring Systems, Inc.

4: Normal Operation

The Air Check O_2 monitor is a single point monitor designed for the continuous detection and measurement of ambient oxygen concentration levels.

4.1 Signal Outputs

The Air Check O_2 monitor consistently outputs an analog signal ranging from 4-20 mA, corresponding directly to the measured oxygen concentration. A 4-mA output signifies 0% O_2, while a 20-mA output denotes the maximum value, representing the full operational range of the monitor. If a system fault occurs, a specific factory-designated code will appear on the local digital display, which will help identify the exact issue with the system.

CAUTION: DO NOT connect to a powered current loop receiver. The Air Check Oxygen monitor supplies the current loop power.

4.2 Instrument Faults

The Air Check O_2 monitor incorporates several self-checking features to ensure reliable operation. If a fault condition is detected, the analog signal output is altered. Common error codes are displayed in the following table.

Condition	Error Code
EEPROM Fault	8
Supply Voltage Out of Range†	16
Oxygen Cell Voltage Fault	64
Oxygen Cell Complete Failure	128
Oxygen System Warmup‡	—

When the monitor is in a Fault state, the analog output will be locked to 2 mA.

† When using a non-PureAire power supply, please ensure that the voltage is regulated to 24±0.5VDC. If the voltage is outside the acceptable range, the "Supply Voltage Out of Range" fault will be activated and will disable the monitor.

‡ The Oxygen system requires a 4-minute warmup period before entering normal operation. During this period the analog output will be locked at 2mA, and the fault relay will be activated until the warmup is completed.

If a Fault condition clears itself, (Yellow LED is no longer illuminated) the Fault message will continue to scroll until manually cleared. To clear the fault message, push the joystick ***down*** ↓.

4.3 Routine Maintenance Schedule

Continuous gas detection systems, crucial for identifying hazardous gas leaks in various environments, require routine maintenance to ensure proper functioning. The frequency of this maintenance largely hinges on the specific environmental conditions. However, as a general

© 2023 PureAire Monitoring Systems, Inc.

guideline, it is recommended to conduct visual inspections **every 1 year** to verify the physical integrity of the system. Similarly, testing the system with nitrogen every 12 months is advisable to confirm the sensor's responsiveness. Please remember that your organization's maintenance policies, along with the unique conditions of your application, may necessitate adjustments to this recommended maintenance schedule.

During normal operation, the unit should be outputting a 17.4 mA signal when the oxygen level is at 20.9%. The LCD digital display should also indicate 20.9% O_2 when the oxygen is at ambient levels.

4.4 Loss of Power Indication

In the event the Air Check O_2 monitor loses 24VDC power, the analog output signal will drop to 0mA, and the LCD display will be blank.

4.5 Alarm Reset

The Air Check O_2 DRA monitor comes equipped with alarm relays. When the monitor's alarms are triggered, the built-in alarm relays, panel-mounted LEDs, and audio horn will activate simultaneously. Depending on the relay settings, the alarm systems will either automatically reset (non-latching settings) or require manual reset (latching settings).

To manually reset the alarms, you can use the joystick or the remote reset function:

1. **Joystick:** To use the joystick for reset, you first need to enter the designated password to access the reset function. Once the password is accepted, you can push in (enter) the joystick to reset the alarms.
2. **Remote Reset:** The alarm relay board includes a two-pin connector for wiring to a remote switch. When a switch is connected, this remote reset function allows you to reset the alarms without using the joystick or needing to enter a password.

Please note: Before you can reset the horn using either the remote reset switch or the joystick, the oxygen levels must return to above the alarm thresholds.

© 2023 PureAire Monitoring Systems, Inc.

5: Monitor Programming

Only qualified personnel should perform programming, maintenance, and sensor verification.

The Air Check O_2 Deficiency Monitor comes with customizable settings, allowing users to modify alarm settings, 4 and 20mA output, and minor sensor adjustments. These settings are organized within menus that can be navigated using the joystick. Access to these menus is secured with a factory-set password.

Please note: Even while adjusting settings within these menus, the Air Check O2 Deficiency Monitor will keep monitoring oxygen levels. **The alarm, fault relays, and mA output remain active and online during any changes made within the menus.**

5.1 Joystick Operation

The Air Check Monitor uses a 4-position joystick with a center pushbutton for selecting menus and changing values. The joystick is programmed to standard protocol as follows:

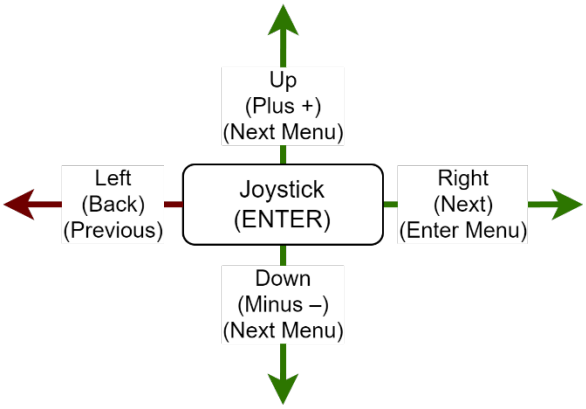

Up – Increases the value
Down – Decreases the value
Right – Next level of menu hierarchy
Previous – Returns to previous level of menu hierarchy
Enter – Enters information into the microprocessor

NOTE: The joystick has a built-in delay to prevent accidental tampering of the menus.

© 2023 PureAire Monitoring Systems, Inc.

5.2 Overall Program Flowchart

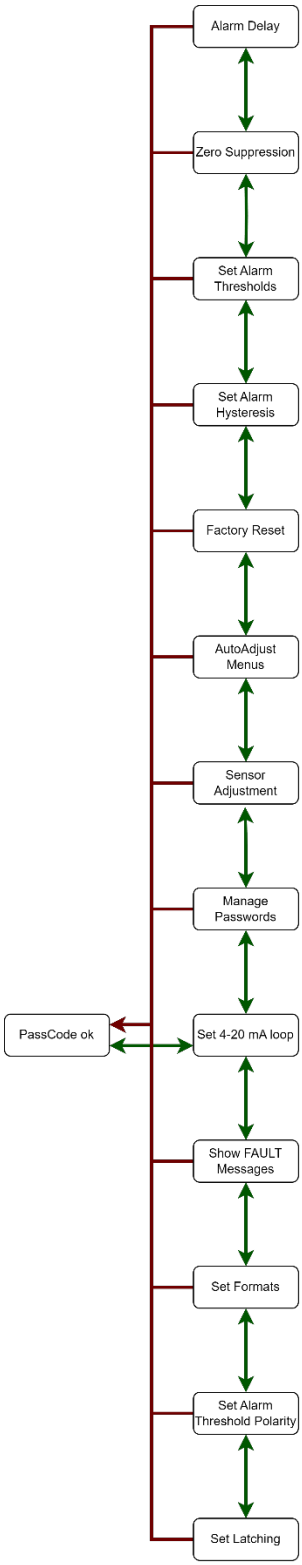

5.2.1 Top Level Menu Navigation

After entering the correct password, the monitor will display “PassCode ok”. To exit the password menu and return to the default screen, move the joystick to the left.

To access the internal settings, move the joystick to the right to enter the ‘Set 4-20 mA loop’ top-level menu state.

Once in this menu state, you can navigate through other top-level internal menus by moving the joystick up or down.

To return to the “PassCode ok” screen from any top-level internal menu, move the joystick to the left. From sub-menus, toggle left until the “PassCode ok” menu state is reached.

© 2023 PureAire Monitoring Systems, Inc.

5.3 Entering Password

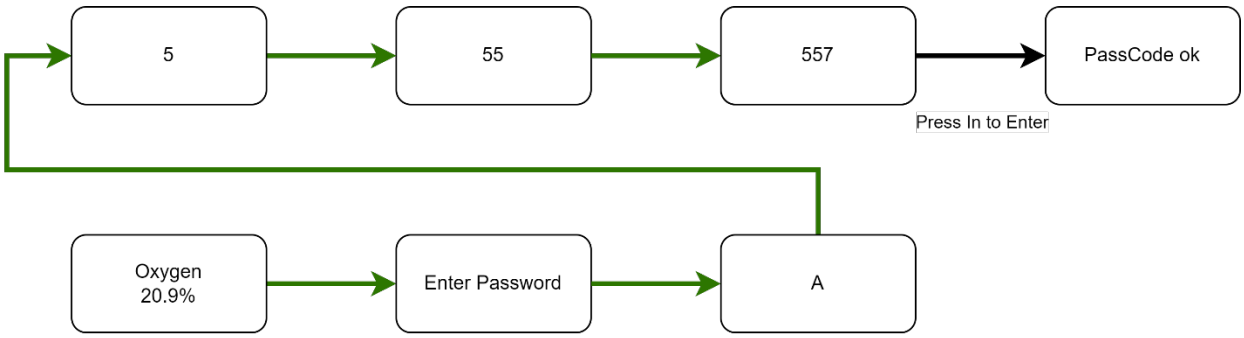

5.4 Changing the User Password

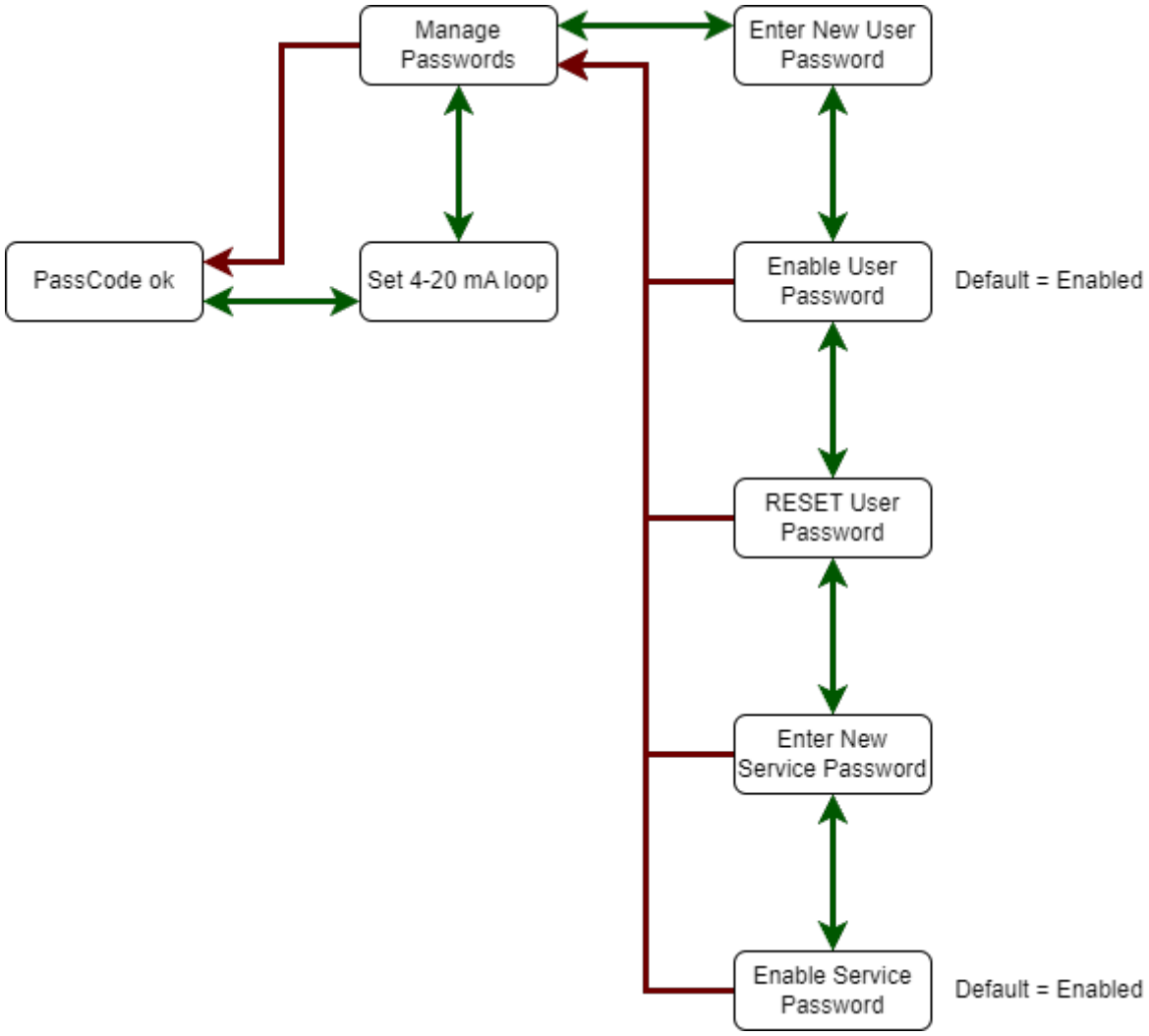

© 2023 PureAire Monitoring Systems, Inc.

5.5 Setting 4-20mA Loop

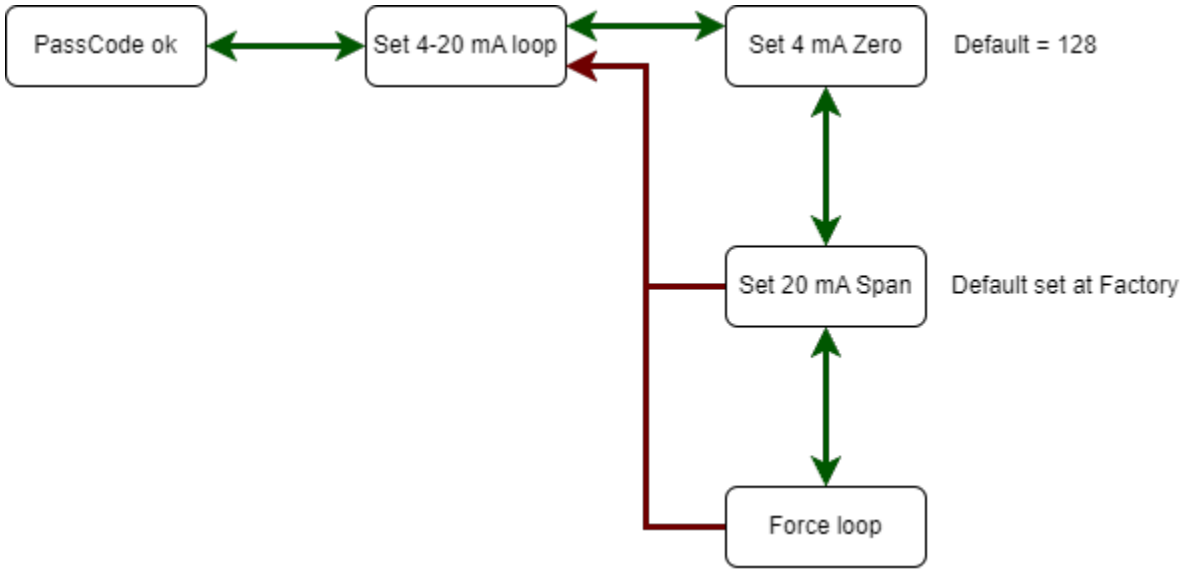

5.6 Setting Relay Formats

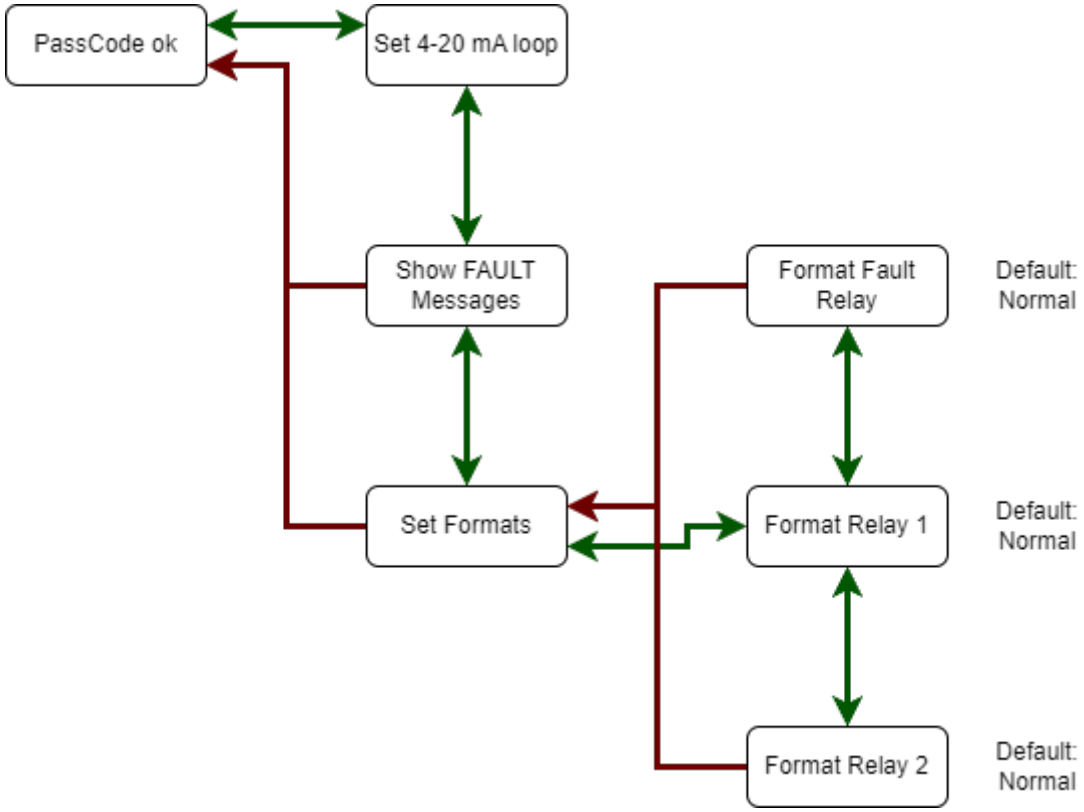

© 2023 PureAire Monitoring Systems, Inc.

5.7 Setting Alarm Polarity

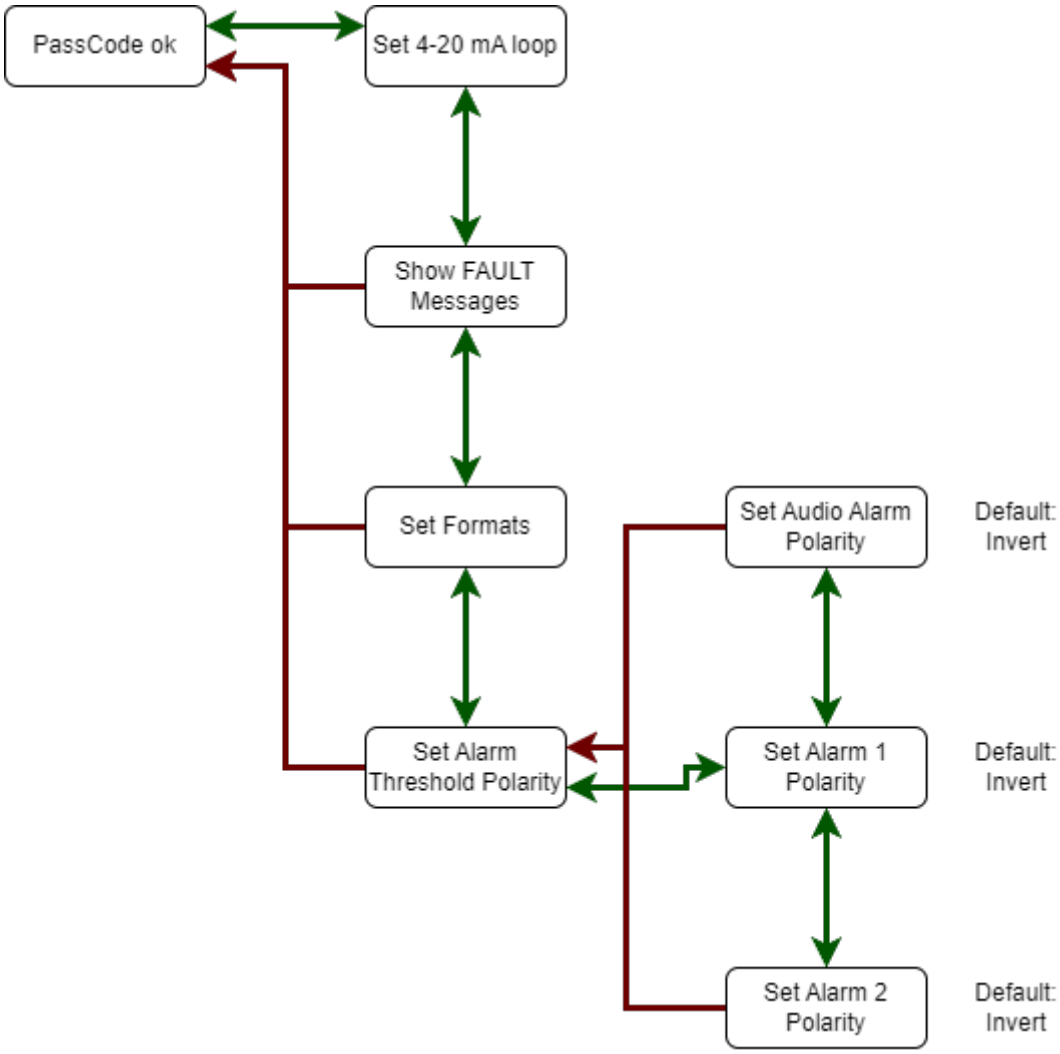

© 2023 PureAire Monitoring Systems, Inc.

5.8 Setting Alarm Latching

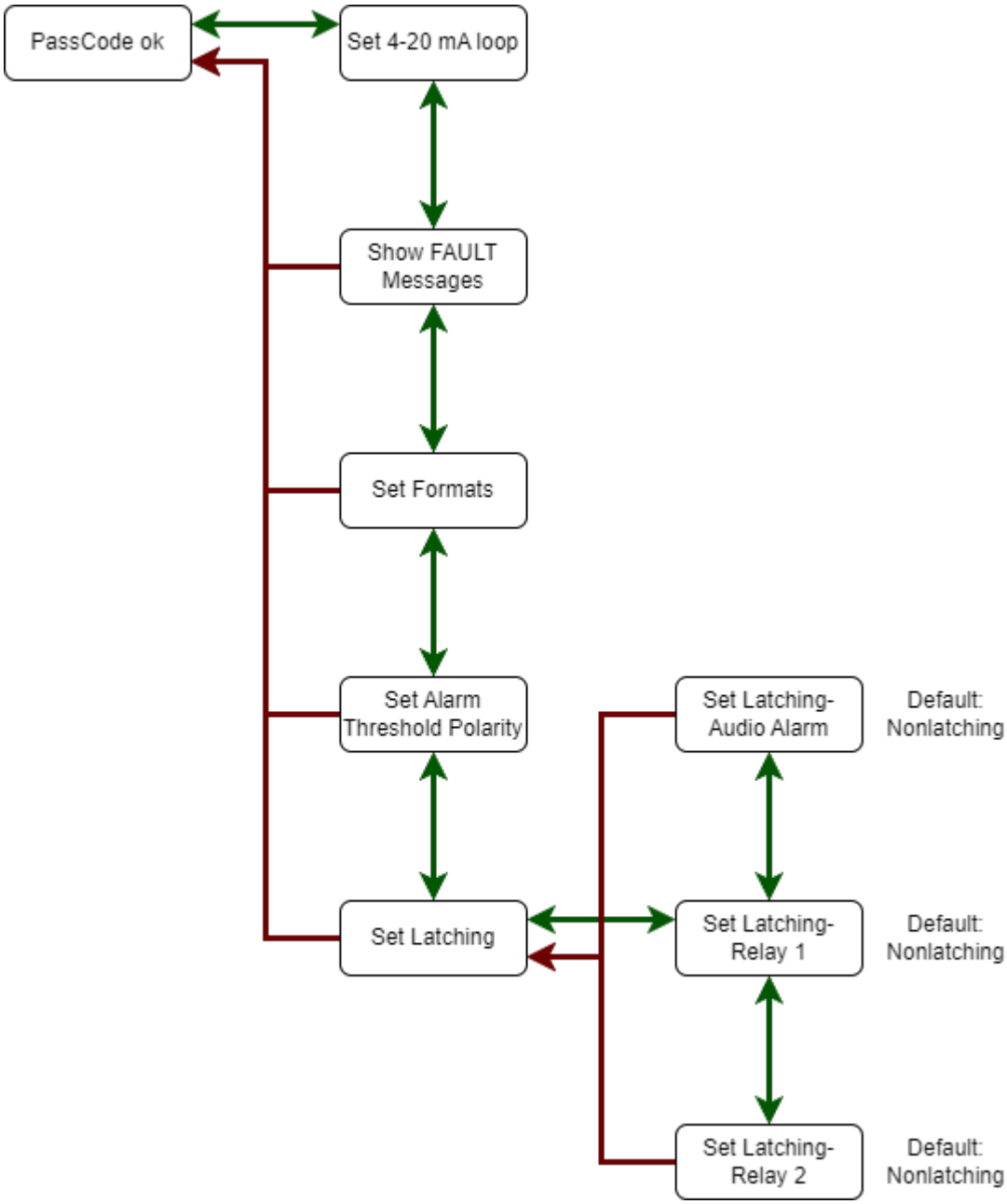

© 2023 PureAire Monitoring Systems, Inc.

5.9 Sensor Adjustment Menus

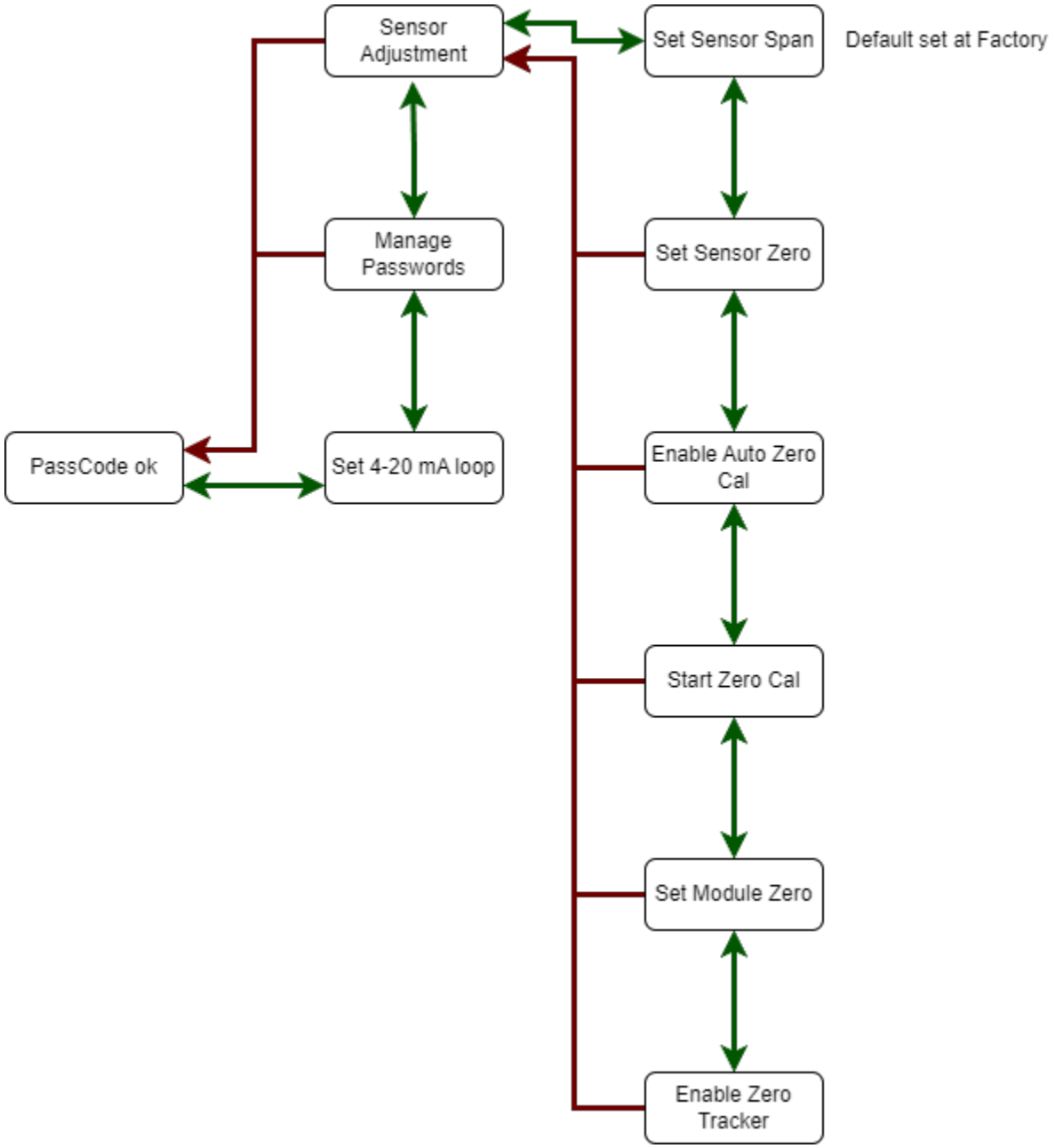

Please refer to Section 6.5 for Manual Monitor Span Adjustment.

© 2023 PureAire Monitoring Systems, Inc.

5.10 AutoSpan Menus

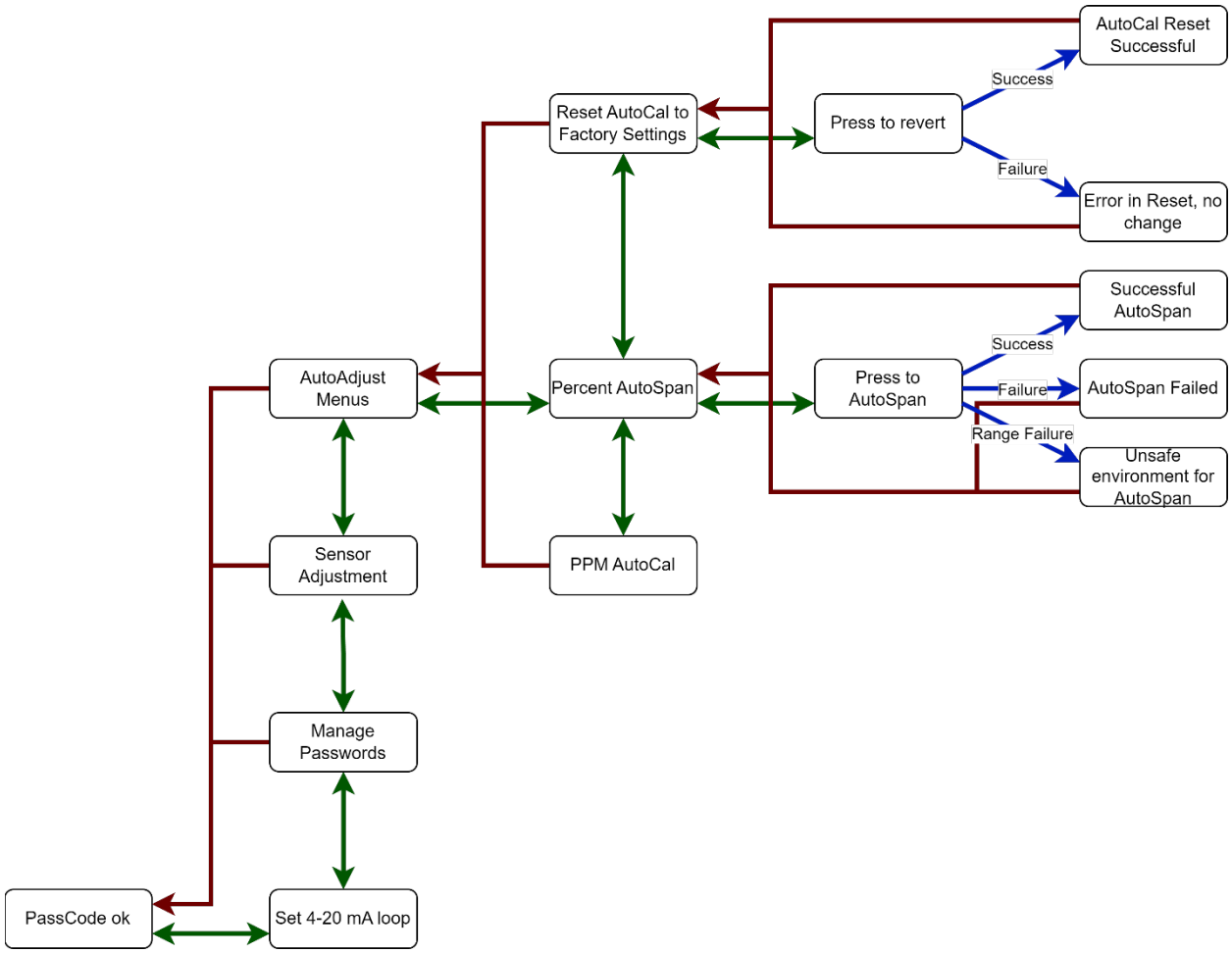

Please refer to Section 6.4 for AutoAdjust Functions.

© 2023 PureAire Monitoring Systems, Inc.

5.11 Factory Reset Menus

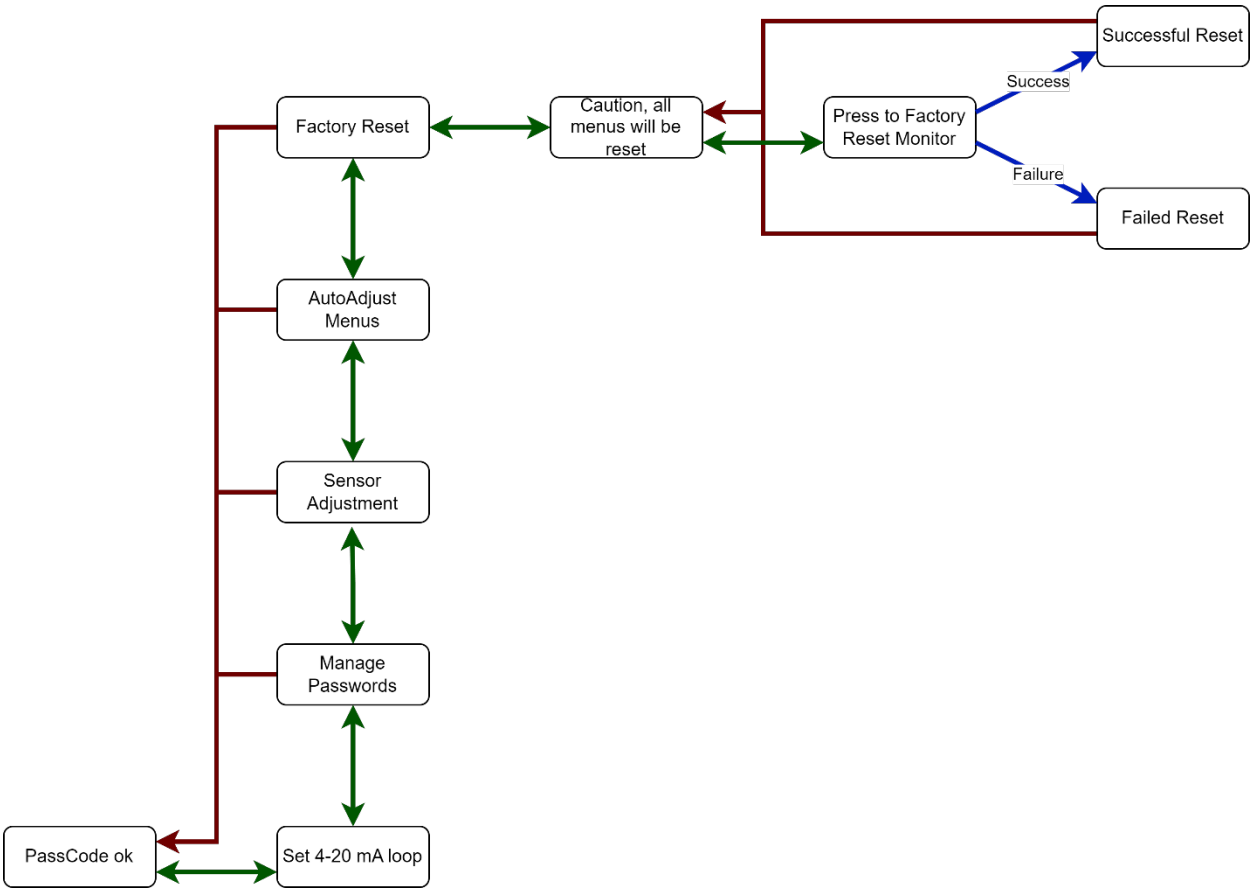

Please refer to Section 2.6 for Default Factory Settings and resettable settings.

© 2023 PureAire Monitoring Systems, Inc.

5.12 Setting Alarm Hysteresis

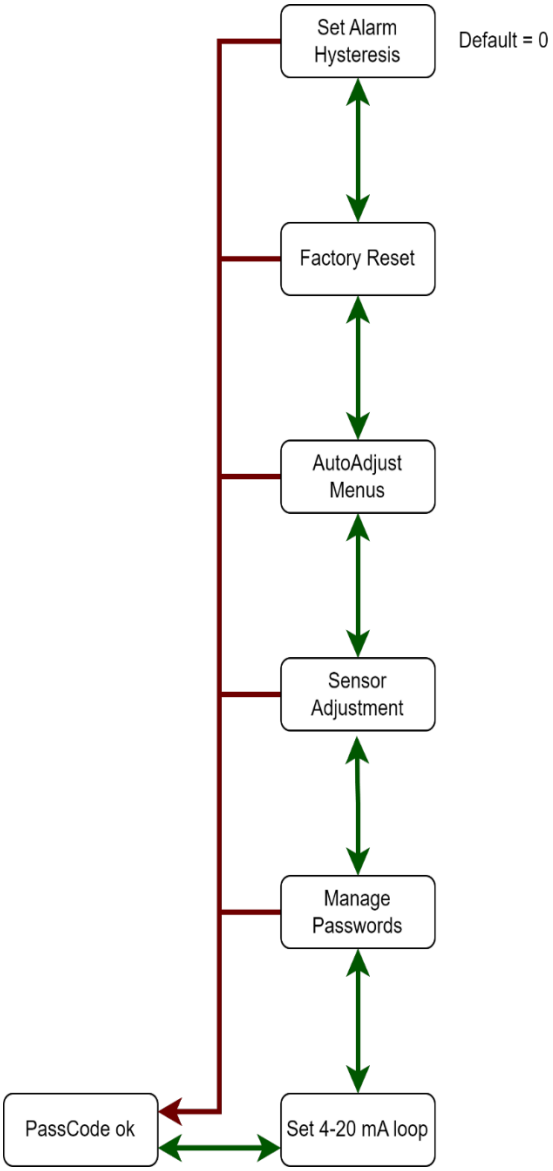

5.12.1 Hysteresis

Hysteresis refers to a system's dependency not just on its current input, but also on its past history of inputs. It's a fundamental concept employed in various scientific and engineering fields, often used to stabilize systems and prevent them from rapid fluctuations in response to minor changes in input, a phenomenon commonly referred to as "chatter". The application of hysteresis, thus, can provide more consistent and reliable system operation.

In control systems or sensors, hysteresis introduces a buffer zone of sorts, within which the system maintains its current state even as the input varies. This has the practical effect of preventing a system from overreacting to small or brief changes in the inputs.

Consider an example in an oxygen monitoring and control system where we want a valve to close when the oxygen level drops to 14.9% and reopen when it reaches 15.5%. The implementation of hysteresis allows us to set the alarm threshold at 15.2%, with a hysteresis value of 0.3%. This means that when the oxygen level falls to 15.2%, the system will trigger the alarm, and the valve will close. However, the valve will not reopen immediately when the oxygen level rises back to 15.2%. Instead, it will wait until the oxygen level reaches the upper hysteresis limit of 15.5% (15.2% + 0.3%). This strategy prevents the valve from frequently opening and closing due to small fluctuations around the 15.2% level, ensuring more stable operation

© 2023 PureAire Monitoring Systems, Inc.

5.13 Setting Alarm Thresholds

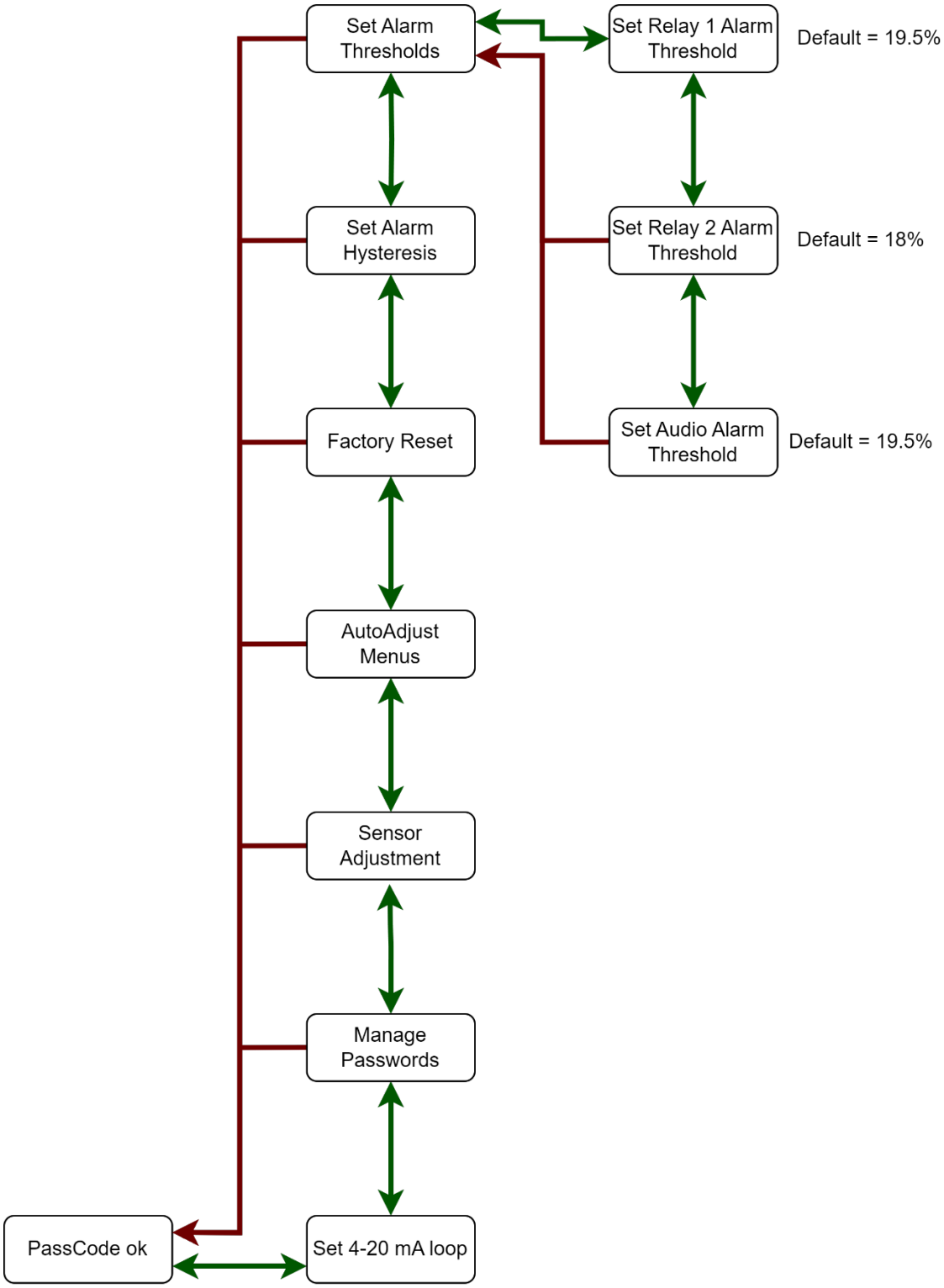

© 2023 PureAire Monitoring Systems, Inc.

5.14 Setting Alarm Delay

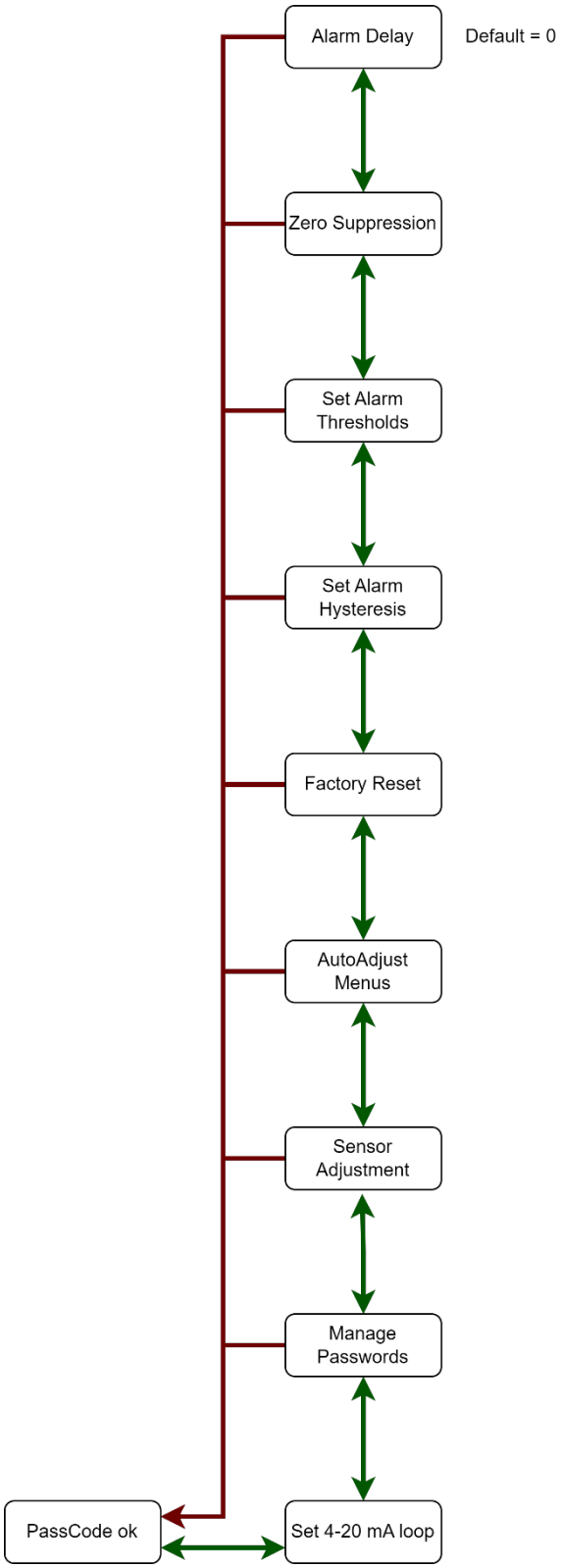

© 2023 PureAire Monitoring Systems, Inc.

6: Maintenance & Sensor Verification

Only qualified personnel should perform maintenance and sensor verification.

6.1 Sensor Verification

Earth's atmosphere naturally contains oxygen at a stable concentration of 20.9%. Therefore, under normal conditions, you can visually verify the Air Check O_2 monitor's readings against this natural standard. The monitor requires occasional testing with a known oxygen concentration to validate the sensor's response to reduced oxygen levels. Furthermore, an annual fine-tuning might be necessary to ensure the sensor's span remains accurate. Span adjustment can be performed using the ambient environment (20.9% O_2), or, when a clean environment cannot be confirmed, against the 20.9% O_2 (ultra zero air) reference gas (see section 6.3).

6.1.1 Sensor Verification Gas

For testing the Air Check O_2 monitor, PureAire recommends the use of our Sensor Verification Kit, which contains the two nitrogen-balanced mixtures used for span adjustments and sensor functionality verification:

- 20.9% O_2 (ultra zero air)
- 8% O_2 in N_2 balance

Each gas serves a distinct purpose. The 8% O_2 mixture is the working gas for routine verification: a single application functions as both a bump test and an accuracy check (see section 6.2). The 20.9% O_2 (ultra zero air) is a span reference, used only when the ambient environment cannot be confirmed to be clean (see section 6.3).

The Sensor Verification Kit can be purchased directly from PureAire: **P/N 94049 with a fixed flow regulator (for non-pump units), or P/N 94050 with a demand flow regulator (for pump units).** Equivalent gas can also be purchased from your local gas supplier or can be recommended by PureAire as required.

6.1.2 Sensor Verification Equipment

The PureAire Sensor Verification Kit contains everything you'll require for the verification process:
If sourcing gas locally instead, a large upright cylinder with a CGA 580/590 connection can be utilized just as effectively with a compatible regulator.

Sensor Verification Equipment Kits Contents and Replacement Part Numbers		
Part Number	**Description**	**Quantity**
94049-Fixed Flow Regulator (Non-Pump Units) Sensor Verification Kit	**94016**-Oxygen, 8%, 103 liter cylinder **94019**-Oxygen, 20.9% (ultra zero air), 103 liter cylinder **94013**-Fixed Flow Regulator, C-10 0.5lt/min **94021**-2ft Length of 1/8" ID ¼" OD tubing **94012**-Carrying Case w/shoulder strap **26036-**Flow Cap - Square **94003**-Flow Cap – Round	1 of each

© 2023 PureAire Monitoring Systems, Inc.

94050-Demand Flow Regulator (Units w/Pump) Sensor Verification Kit	**94016**-Oxygen, 8%, 103 liter cylinder **94019**-Oxygen, 20.9% (ultra zero air), 103 liter cylinder **94014**-Demand Flow Regulator, C-10 **94021**-2ft Length of 1/8" ID ¼" OD tubing **94012**-Carrying Case w/shoulder strap **26036-**Flow Cap - Square **94003**-Flow Cap – Round	1 of each

The kit regulators supply gas at the correct rate automatically: the fixed flow regulator (94049) is preset to 500ccs/min (0.5LPM), while the demand flow regulator (94050) supplies gas as the pump draws it. If using your own regulator, set it to 500ccs/min or 0.5LPM to guarantee a consistent and controlled supply of gas during the verification process.

If not using the included regulator, remember to set the regulator to ensure a gas flow rate of 500ccs/min or 0.5LPM. This guarantees a consistent and controlled supply of gas during the verification process.
Subjecting the Air Check monitor to different concentrations or mixtures of oxygen span gas is acceptable. Please take care to not expose the sensor to any harmful gases.

NOTE: If the instrument is connected to a controller, set the controller to standby mode to avoid accidental alarms.

6.2 Sensor Functionality Verification Procedure

CAUTION: Always adhere to all safety protocols while handling compressed gases and oxygen-depleting mixtures.

Testing the sensor and monitor's response to a reduced-oxygen environment provides a quick check on their functionality. Apply the 8% O_2 in N_2 balance mixture from the Sensor Verification Kit. The monitor reading should drop to 8.0% O_2 within a minute. Upon removal of the gas, the unit should recover to the ambient oxygen level of 20.9% within the same timeframe.

A single application of the 8% mixture provides a full check of the monitor as it comes configured from the factory. Because 8% O_2 is below the standard alarm thresholds of 19.5% and 18% O_2, the test exercises the complete alarm response: check that optional features like the alarm relays and audio alarms are triggered during the alarm state and deactivate appropriately after the test. And because the mixture is certified to a known oxygen concentration, the same application also verifies the accuracy of the monitor's reading, which should fall within ±0.2% of the certified value (8.0% O_2). No additional test gas is required for routine verification.

If the sensor reading deviates more than 0.2% from the expected value, adjust the sensor's span (see section 6.3) and repeat the test. If the sensor doesn't recover, or has difficulty reaching the 8% reading, please reach out to PureAire for more comprehensive servicing.

© 2023 PureAire Monitoring Systems, Inc.

6.3 Annual Span Verification to Ambient Oxygen

The Air Check O_2 monitor should typically display a reading of 20.9% in a clean, non-oxygen-deficient environment, mirroring the ambient oxygen concentration. However, over time and with sensor aging, this reading may marginally decrease. Hence, we recommend an **annual** verification and adjustment of the sensor's span to reflect the ambient oxygen concentration of 20.9%

When spanning to the ambient environment, it is crucial to position the Air Check O_2 monitor in an environment devoid of oxygen deficiency or contamination. This ensures an accurate reflection of the ambient oxygen concentration, promoting the device's precision and longevity. Using this procedure, you can span adjust the O_2 monitor to accurately display the oxygen concentration as 20.9% under standard, non-oxygen-deficient conditions.

If a clean ambient environment cannot be guaranteed (for example, leaks are present or their absence cannot be verified), do not span to ambient air. Instead, apply the 20.9% O_2 (ultra zero air) mixture from the Sensor Verification Kit and adjust the span until the monitor reads 20.9%. This is the intended use of the ultra-zero air: a certified clean-air reference for span adjustment. It is not required for routine bump testing.

See sections 6.4 & 6.5 for instructions on span adjustment.

NOTE: It is recommended to warm up the Air Check Oxygen monitor for at least two hours before making any adjustments to the sensor.

© 2023 PureAire Monitoring Systems, Inc.

6.4 AutoAdjust Functions

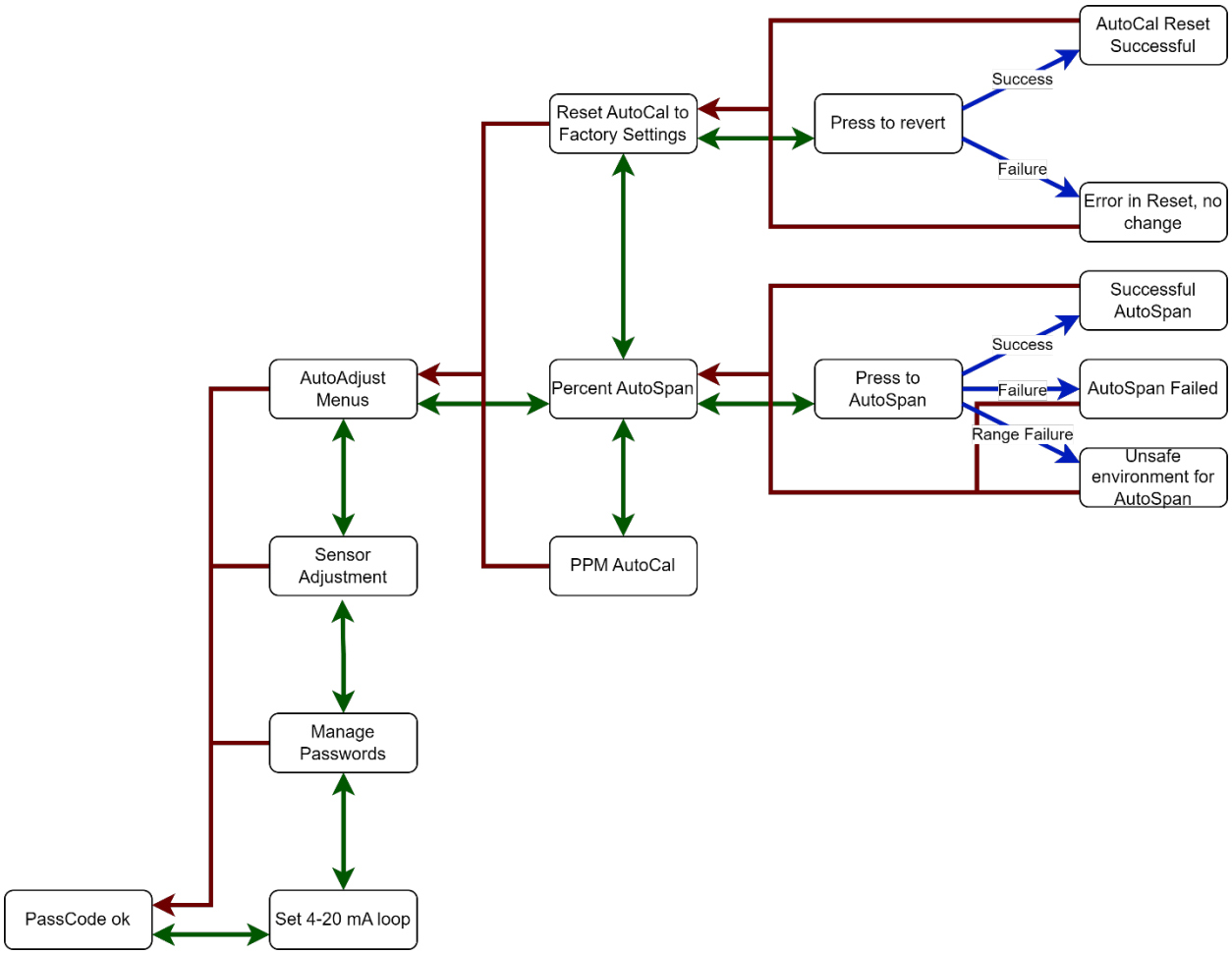

6.4.1 Monitor AutoSpan

The V5.0 update introduced the AutoSpan feature for the monitor, which can be accessed using the user password (default = 557). Once “Password ok” is displayed, navigate to the AutoAdjust Menu using the joystick. Within the AutoSpan menu, toggle right and then press in to start AutoSpan when prompted to ‘Press to AutoSpan’.

This innovative feature adjusts the internal span of the monitor to match the ambient oxygen level, nominally at 20.9%. Please note that PureAire’s specifications state that the monitor’s accuracy is within ±0.2%. If the monitor’s reading is already within 20.7-21.1%, the AutoSpan function will be unavailable and any attempts to AutoSpan will not modify the internal settings.

Moreover, if the monitor’s reading is <19.5 or >22.5%, an “Unsafe environment for AutoSpan” alert will appear upon attempted AutoSpan, and no changes will be made. This is a safety feature designed to ensure accurate readings.

Even though AutoSpan is a helpful new addition, standard manual span adjustment is still available as per your needs. For manual adjustment, please see Section 6.5.

© 2023 PureAire Monitoring Systems, Inc.

6.4.2 Reset AutoCal to Factory Settings

The V5.0 update also included a new menu option called “Reset AutoCal to Factory Settings”. This feature allows you to reset only the sensor’s span to its original factory settings, without affecting other parameters such as alarm thresholds or relay formats that you may have customized.

To use this option, navigate to the “Reset AutoCal to Factory Settings” menu, and when prompted, press in to initiate the reset. This will revert the sensor’s span to its factory setting while keeping your personalized configurations intact.

6.5 Manual Monitor Span Adjustment

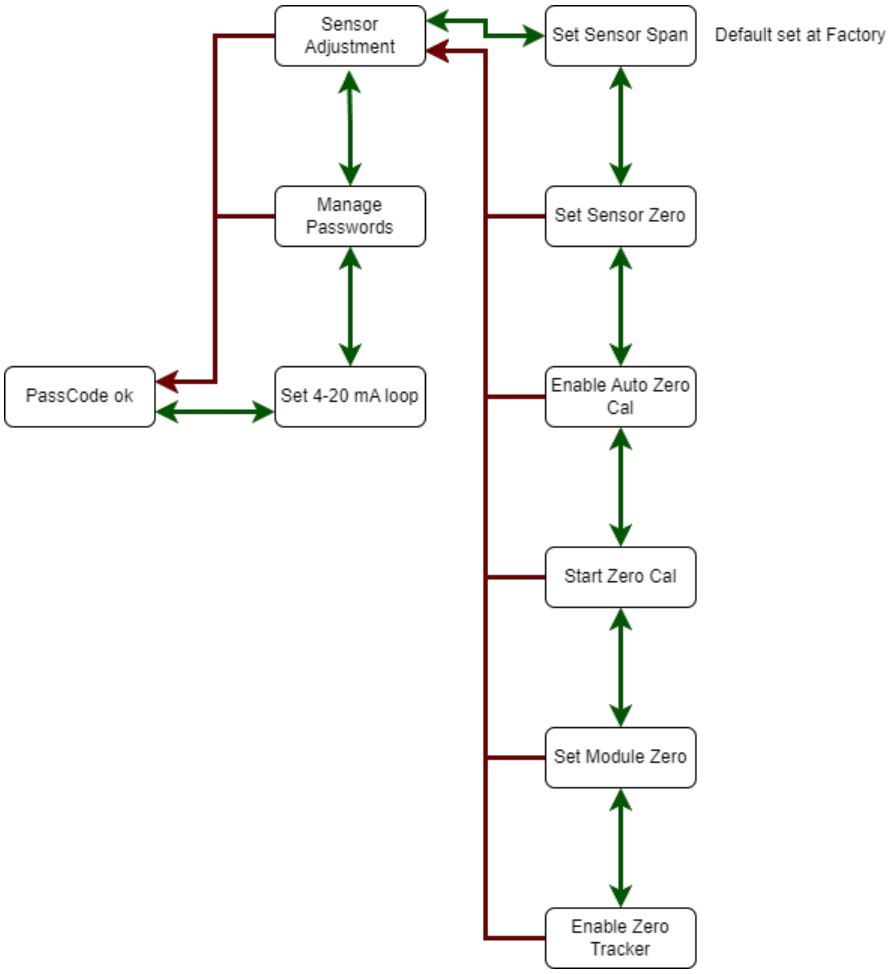

Navigate to the “Set Sensor Span” menu and toggle right to access the sensor span. The display will indicate a value between 0 and 255 counts. Pushing up or down on the toggle will increase and decrease the count value respectively. To increase the displayed reading on the monitor, decrease the sensor span.

Adjust the span until the digital display reads 20.9 ± 0.2%. Press ENTER on the joystick to accept the value.

© 2023 PureAire Monitoring Systems, Inc.

NOTE: The monitor can be calibrated to a known concentration of Oxygen, to see the exact span gas concentration the entire Air Check O_2 monitor needs to be completely immersed into the span gas environment.

CAUTION: For best results, the Oxygen monitor should be protected from wind and high airflow when gas calibrating with test gas, as well as tested in an upright position to allow the span gas to fully saturate the sensor cell.

© 2023 PureAire Monitoring Systems, Inc.