## Sample Draw Oxygen Monitor with 10+ Year Sensor

ITEM#:99019 **0-25% No Horn. Includes Domestic Power Supply**
ITEM#:99029 **0-25% Includes Horn & Domestic Power Supply**
ITEM#:99129 **0-25% Includes Horn & International Power Supply**
ITEM#:99130 **0-25% No Horn. Incl. International Power Supply**
ITEM#:99059 **0-95% Includes Horn & Domestic Power Supply**
ITEM#:99060 **0-95% No Horn. Includes Domestic Power Supply**

## Product Summary

The Sample Draw Oxygen Deficiency Monitor is perfect for storage areas, confined spaces, and other locations where remote oxygen monitoring is required. The built-in pump samples oxygen levels from up to 100 feet away and is suitable for facilities that use inert gases including, but not limited to, nitrogen, helium, and argon. The monitor is ideal for environments such as MRI facilities, cryogenic spas, hospitals, freezers, and laboratories. The monitor will remain accurate at temperatures as low as -40C. PureAire's durable, non-depleting, zirconium oxide sensor will last 10+ years in a normal environment, without needing to be replaced.

### Facilities That Need This Product

- *Laboratories*
- *MRI*
- *Hospitals*
- *Pharmaceutical*
- *Cryogenic Spas*
- *Refrigeration*

PureAire monitoring systems, inc.

## FEATURES

- Long-life 10+ year average sensor life
- Two, user-adjustable, alarm relay setpoints available or alarm defaults are set for 19.5% and 18.0%
- Built-in audible alarm 90 db*(Item#s 99029, 99129, 99059)*
- 3 Year warranty
- Digital display
- 4-20mA analog output (Active)
- Wall mounting brackets
- Built-in flow sample pump
- UL, CUL approvals
- 24V DC Power Supply Included*(Item#s 99019,99029,99059,99060)*
- International Power Supply Incl.(*Item#s 99129,99130)*

## Why choose PureAire?

PureAire Monitoring Systems, Inc. is an industry leader oxygen monitoring and gas detection. For over 25 years we have dedicated ourselves to the safety of our clients, and the customers they serve, by manufacturing monitors that are long-lasting, accurate, and reliable. PureAire takes pride in providing exceptional customer service, along with 24/7 availability to our technical service department.

## Why a Sample Draw O2 Deficiency Monitor?

The Sample Draw Oxygen Deficiency Monitor is designed for continuous, remote monitoring in locations where it is not possible to place the monitor, such as MRI rooms, and where low oxygen levels pose a hazard to personnel.

## What gases can be detected with a Sample Draw O2 Deficiency Monitor?

PureAire's sample draw O2 deficiency monitors continuously measure oxygen levels in an ambient atmosphere where inert gases, including nitrogen, argon, carbon dioxide, and helium are used.

## Installation is easy. Plug-in ready.

The monitor will arrive ready to work right out of the box. Simply secure the unit to the wall 3-5 feet from the gas source, connect a length of sample tube, up to 100 feet, and plug in the monitor. The monitor will begin sampling oxygen levels after a brief startup period. Levels are displayed clearly on the screen for easy access and visibility.

***Sampling tubes can be used in various locations including MRI rooms**

# Top Advantages of Sample Draw Oxygen Monitor

## Oxygen Deficiency Alarm

PureAire's O2 Monitor comes with 2 adjustable alarm setpoints that can connect to a horn/strobe, exhaust fan, 8 channel controller, remote display, or into building systems. Alarm signals also can tie into automatic shut-off valves when oxygen levels fall below the OSHA threshold.

## Easy To Use

The Air Check O2 Deficiency Monitor provides constant monitoring with little to no adjustments, saving you time and money while allowing the monitor to operate seamlessly. Our quality sensor makes this the longest lasting O2 monitor on the market.

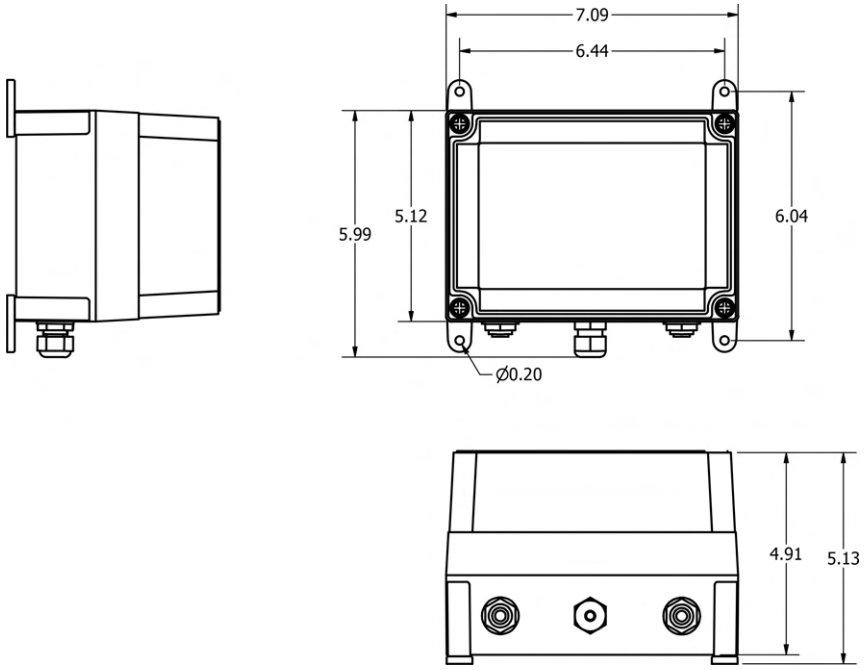


# Top Accessories

**8 Channel Touch Screen Programmable Controller**
ITEM #: 99233

**Remote Digital Display**
ITEM #: 99091 0-25%
ITEM #: 99186 0-95%

**Red Horn/Strobe**
ITEM #: 42002

PureAire monitoring systems, inc.
**1-888-788-8050**
**info@pureaire.net**
**pureairemonitoring.com**
1140 Ensell Road
Lake Zurich, IL 60047
1-847-726-6000

*Revision Date 05/11/2026*