Universal Gas Detector

Instruction Manual

Part Numbers:

99030, 99031, 99140, 99065, 99159, 99090

PureAire Monitoring Systems, Inc.
1140 Ensell Road
Lake Zurich, Illinois 60047
Phone: 847-726-6000
Fax: 847-726-6051
Toll-Free: 888-788-8050
pureairemonitoring.com

Rev. 4.18 July 6, 2026

Welcome to PureAire Monitoring Systems

I would like to thank you for investing in our continuous life safety and process control toxic gas monitoring systems.

PureAire offers an unbeatable combination of experience and innovation in solving the safety and environmental needs of our customers. We can provide small systems of a few points to a total multi-point turnkey computerized package.

PureAire's proprietary sensor cell technology and state-of-the-art electronics are designed to interface with the latest distributive or PLC-based control systems. We believe that our experience, innovative products, and commitment to service will satisfy your specific monitoring needs now and in the future.

Our growth is a result of our total commitment to supporting our customers. We are available 24 hours a day, 7 days a week, to help you when you need us. Our 24-hour Emergency phone number is 1-224-443-5445. We can provide field service, preventative maintenance programs, and training to your technicians in the operation of our equipment. Our goal is to provide the best after-sales service and support in the industry. That is just one way PureAire takes that extra step to ensure your complete satisfaction.

Thank you again for investing in PureAire Monitoring Systems for your monitoring needs and I am proud to welcome you to our family of valued and satisfied customers.

Sincerely,

Albert A. Carrino
CEO

Please Read Before Operating

The Universal Gas Detector is designed to provide long-term, reliable performance. Read this “Guide to Operation and Installation” carefully. Installation, maintenance, calibration, and testing should be carried out by qualified personnel only.

The Universal Gas Detector requires 24 VDC regulated power. Please Do Not connect the monitor to any voltage that exceeds 24 Volts DC. Please Do Not Connect the monitor to any AC Voltage.

Always connect the sensor to the transmitter/readout before powering up the detector. If you connect the sensor to the transmitter while powered, the detector will reset and activate a complete 30-second startup, which will activate the internal relays and internal horn. If you have external horns and alarms connected to the detectors internal relays, they will also activate!

The renewable sensor is filled with a liquid electrolyte. When storing the sensor cell, never store the sensor cell horizontal with the pressure compensation screw positioned down or store the sensor cell upside down. This can cause the electrolyte to leak from the sensor cell pressure compensation screw.

PureAire Renewable sensor cell has a 7-pin connector that connects to the transmitter and remote sensor cable. NEVER twist the sensor when connected to the transmitter. Twisting the sensor cell inside the transmitter connector will damage the 7-pin connector.

The sensor cell is shipped with a jumper pin or battery on the 7-pin connector. REMOVE this jumper before connecting to the transmitter.

When switching the gas sensor with a new universal transmitter, you must reenter the Alarm 1 and Alarm 2 set points for the monitored gas into the Universal transmitter. Only the calibration zero and span information stays with the sensor cell. All other configuration information must be entered manually.

After initial power up of the Universal monitor or when connecting a new sensor cell to the transmitter, it is required to perform a Zero adjustment. See Section 6.2.4

Table of Contents

1: Introduction 3
1.1 Key Features 3
1.1.1 Renewable Gas Sensor with microcontroller 4
1.1.2 Smart Electronics 4
1.1.3 Calibration 4
1.2 Component Identification 4
1.2.1 Front View Exterior 4
1.2.2 Front View Exterior 5
1.2.3 Side View Exterior with Audio Alarm 6
1.2.4 Transmitter Interior 7
1.2.5 Alarm Relay Board 7
1.2.6 Enclosure Mounting Feet 8
2: Specifications 9
2.1 Performance Specifications 9
2.2 Gas Detection System 9
2.3 Signal Outputs 9
2.4 Electrical Requirements 9
2.5 Physical Characteristics 10
2.6 Universal Gas Detector Default Factory settings 10
3: Installation 11
3.1 Site Requirements 11
3.2 Mounting 11
3.2.1 Transmitter Enclosure 11
3.2.2 Universal Gas Detector 11
3.2.3 Remote Sensor 12
3.3 Wiring 13
3.4 Sensor Installation 14
3.5 Initial Startup 15
4: Normal Operation 16
4.1 Signal Outputs 16
4.2 Instrument Faults 16
4.3 Routine Maintenance Schedule 17
4.3.1 Recommended Routine Maintenance Schedule 17
4.4 Loss of Power Indicator 17
4.5 Alarm Reset 17
5: Universal Gas Detector Programming 18
5.1 Joystick Operation 18
5.2 Program Flowchart 18
5.3 Entering the Password 23
5.4 Changing the User Password 24
5.4.1 Enable User Password 26
5.4.2 Reset User Password 26
5.5 Entering the Menus 27
5.5.1 Set 4.20mA Loop 27
5.5.2 Set Formats 29
5.5.3 Set Alarm Threshold Polarity 31
5.5.4 Set Latching 33
5.5.5 Resetting a Latching Alarm 35

5.5.6 Set Alarm Delay 35
5.5.7 Set Zero Suppression 36
5.5.8 Set Alarm Thresholds 36
5.5.9 Set Alarm Hysteresis 38
5.5.10 Set Sensor Adjust 40
5.5.11 Main Operation Mode 40
6: Maintenance & Sensor Verification 41
6.1.1 Sensor Cell Recharge 41
6.2 Sensor Calibration Procedure 46
6.2.1 Sensor Gas Calibration 46
6.2.2 Sensor Calibration Equipment 46
6.2.3 Sensor Calibration Procedure 47
6.2.4 Setting Zero 48
6.2.5 Span Calibration 48
7.0 Appendix 51
Sensor Cell Replacement Parts 53

1: Introduction

The Universal Gas Detector is a compact gas monitor designed for the continuous detection and measurement of toxic and corrosive gas leaks. It consists of a generic transmitter/controller connected to a dedicated, renewable gas sensor that automatically inputs the gas and measurement range. The Universal is a single-point monitor built into a polycarbonate UL-listed enclosure suitable for indoor use. It is also available for NEMA 4X IP65 outdoor use when supplied without the built-in horn. It is designed to work as a stand-alone monitor, or it can be connected to any PLC, programmable logic controller, or SCADA system.

The system has the following features:

- Universal transmitter connects to any PureAire toxic & corrosive gas sensor
- Plug & Play sensor sets the gas and measurement range
- Sensor can be remote up to 30 feet from the transmitter
- Quick & simple remote sensor gas calibration; the sensor span stays with the sensor
- Digital display and built-in audible horn
- User-selectable dual-level alarm and system fault relays
- Renewable long-life electrochemical sensor cell
- 24 VDC operation
- 4-20 mA output
- Supervised electronics monitors electronics with a separate fault relay
- C UL listed Measuring Equipment E363306

➡ **NOTE: The Universal gas detector enclosure is NOT rated for Class 1, Groups B, C & D**

Ideal for continuously detecting gas leaks in confined spaces or areas where people are working, the Universal Gas Detector does not drift when the weather or temperature changes. Each system consists of a long-life renewable sensor with a built-in microprocessor that stores gas, range, and calibration information. This manual covers the installation, operation, and maintenance of the Universal Gas Detector.

1.1 Key Features

The Universal Gas Detector monitor incorporates several user-friendly features designed to simplify installation, operation, and maintenance.

1.1.1 Renewable Gas Sensor with microcontroller

The heart of the system is a smart renewable sensor cell that is programmed with the specific gas and measurement range information. The renewable gas sensor automatically inputs the gas and measurement range into the Universal transmitter. Simply plug the sensor into any Universal transmitter and it is ready to go.

1.1.2 Smart Electronics

The Universal Gas Detector incorporates a special electronic circuit that continuously monitors sensor and transmitter operation. This smart circuitry alerts the user to sensor faults and other electrical problems that may interrupt surveillance through the standard mA signal output signal and through the fault relay.

1.1.3 Calibration

The PureAire Gas Sensor used with the Universal Gas Detector has a dedicated microcontroller built directly into the sensor electronics which allows you to remove from it the transmitter for all routine calibration and maintenance. Calibration data is directly entered into the sensor electronics and then transferred to the transmitter once it is plugged in. Calibration data stays with each sensor. See Section 6.2 for the calibration procedure

1.2 Component Identification

1.2.1 Front View Exterior

1. **Digital Display** — 3-digit backlit LCD digital display for showing the type of gas detected and concentration in ppm, ppb or %.
2. **Joystick** — Used for selecting and adjusting the built-in menus. The joystick is also used to select alarm levels, relay settings and resetting any latching visual and audio alarms.
3. **Cable Port** — This is the opening in the transmitter housing for connecting the 4-20 mA output and 24 VDC power cable.
4. **Sensor & Protector**—The sensor can be mounted directly to the transmitter case as shown. If the optional 30 foot remote sensor cable is used, it is connected into a second cable port. See photo below
5. **Mounting Feet** — There are 4 feet used to mount the Universal Gas Detector to a wall or other flat surface.
6. **Transmitter Cover** — A removable cover that protects the interior of the transmitter.
7. **Transmitter Cover Fasteners** — There are 4ea. captive plastic screws secure the transmitter cover in place.
8. **Electronics Fasteners** — There are 2ea. captive screws secure the electronics to the enclosure

1.2.2 Front View Exterior

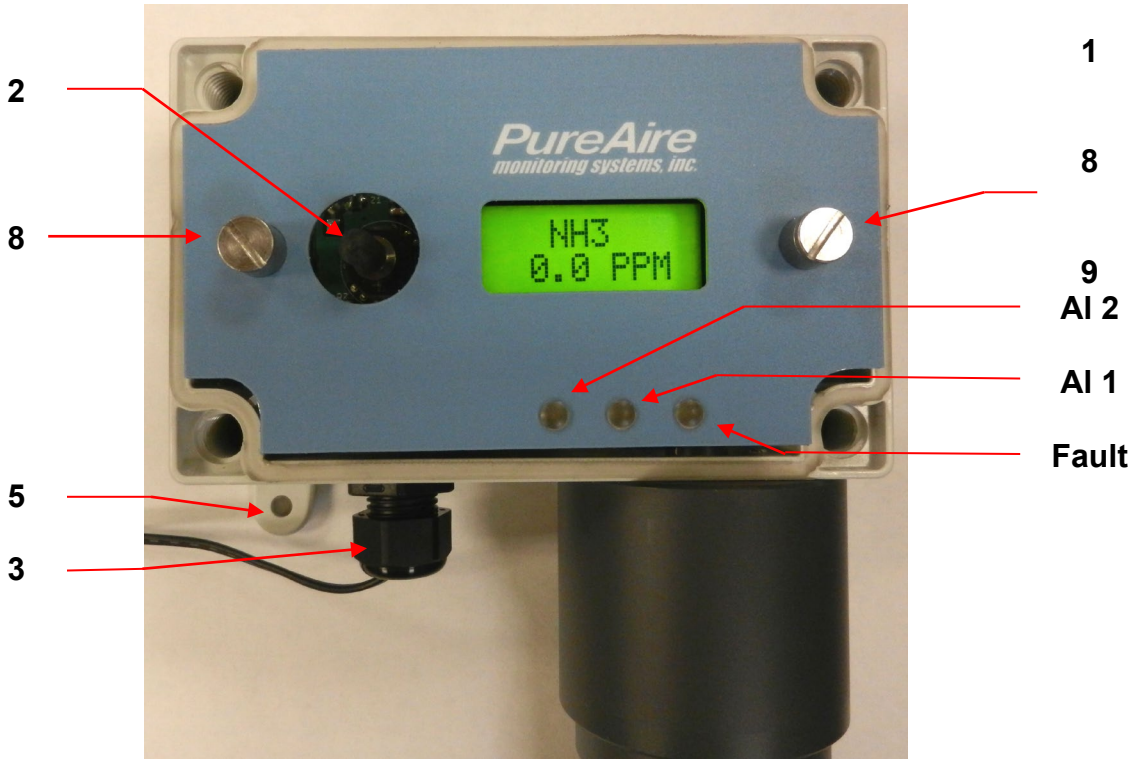

9. **Alarm Indicators** — 3 multicolored LED indicators for showing:

Alarm level 1	Orange LED
Alarm level 2	Red LED
Fault Alarm	Yellow LED

1.2.3 Side View Exterior with Audio Alarm

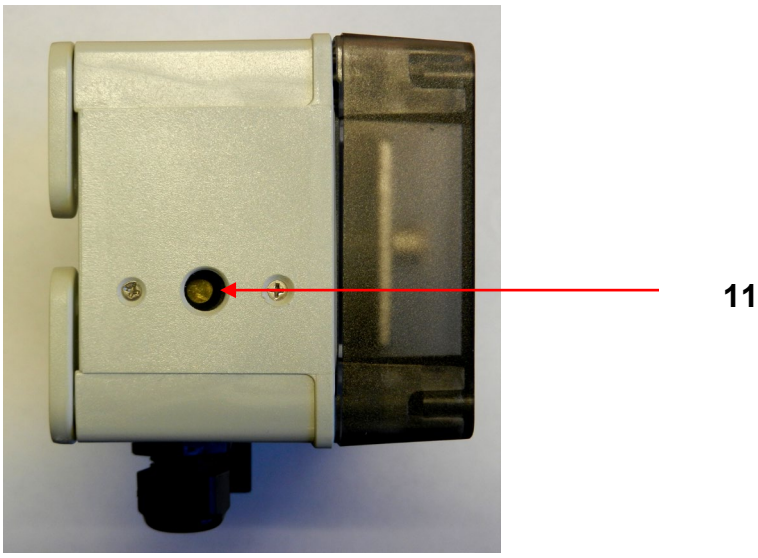

10. **Audio Horn** — This built-in horn is a 90dB high pitched audio sound that will activate when the alarm levels go above the selected alarm thresholds. The audio alarm is non-latching and will automatically turn off when the gas levels go below the alarm thresholds

NOTE*:* The audio alarm is an immediate alarm. Gas concentration levels must Recover below the alarm thresholds before the horn turns off. **There is no alarm delay function available.**

1.2.4 Transmitter Interior

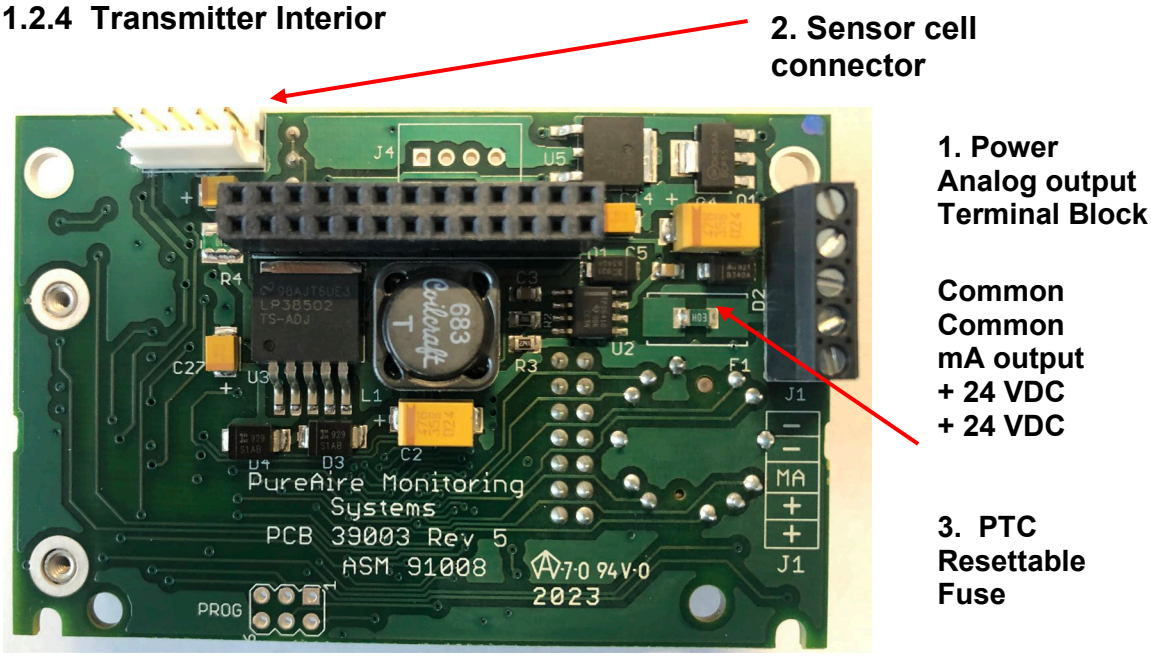

1. **Power Analog Terminal Block** — This terminal block is where the 24VDC power and 4-20 mA analog output connection is made.
2. **Sensor Cell Connector —** This connector is where the sensor cell is connected. **NOTE: Never connect the sensor to this connector while the monitor is powered. This will damage the sensor**
3. **PTC Resettable Fuse —** The PCB is protected with a PTC Fuse that is resettable and Never needs to be replaced. If it trips, you will need to turn power off to the monitor. When power resumes the fuse will reset.

1.2.5 Alarm Relay Board

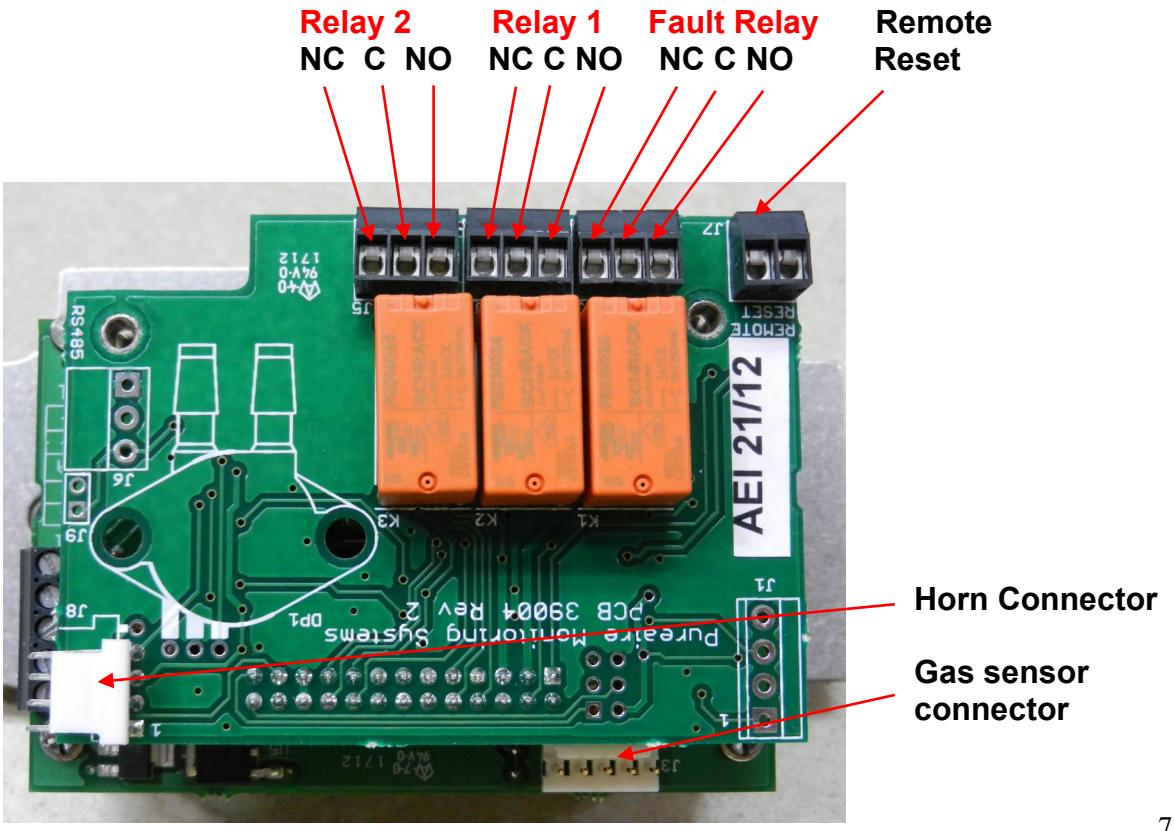

1.2.6 Enclosure Mounting Feet

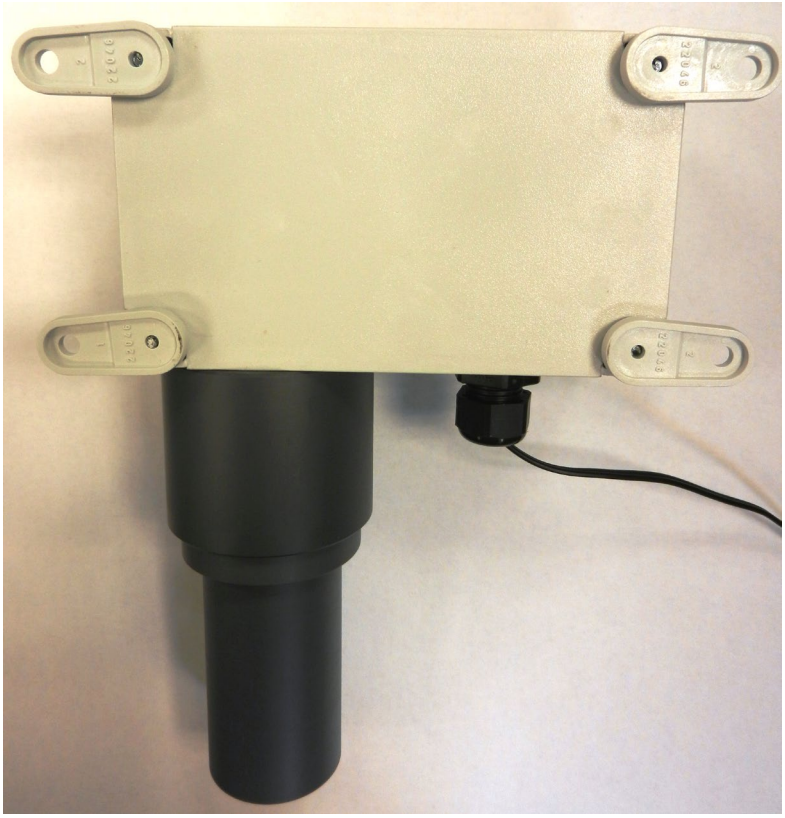

Mounting Feet Can be oriented in any direction

Feet can also be removed for mounting the monitor flush with a wall or other surface

Universal Gas Detector with remote cable connected to the wall
(Max cable length 30 feet)

Universal Gas Detector with remote cable connected to a duct
(Max cable length 30 feet)

2: Specifications

NOTE: *For our continual product improvement, all specifications are subject to change without notice.*

2.1 Performance Specifications

Sensor Type:	Renewable, electrochemical with built-in microcontroller
Response Time:	T90 < 60 sec
Repeatability:	± 10% of reading
Fault Indicators:	Loss of VDC power; analog signal drops to 0 mA Electronics failure: Fault relay activated and analog signal drops to 2 mA.
Operating Temp:	-30° to 134°F (-40° to +55°C); consult PureAire for lower or higher operating temperatures.
Humidity:	0 to 95% RH; consult PureAire for sensors which can operate in 100% condensing RH environments.
Environment:	**PSU only UL spec**, Altitude 2000 m, Pollution Degree 3, Intended for Indoor Use.
UL / CUL listing:	Measuring Equipment E363306
Enclosure:	Polycarbonate UL listed designed for indoor use. Optional, NEMA 4X, IP65 water resistant, without built-in horn

2.2 Gas Detection System

Universal Transmitter	Microprocessor electronics with built-in 3-digit backlit LCD display Two alarm relays, one fault relay and 4-20mA analog output. Joystick operated menus.

2.3 Signal Outputs

Local Display:	Digital display set for the proper gas and measurement range when the gas sensor is plugged in. The range can be accessed via the joystick on the front panel. In the measurement mode pushing the joystick down will scroll the gas and range on the display. Push the joystick down again to stop the scrolling and display the gas again.
Standard	Analog Output: DC 4-20 mA
Optional	Relay Output: Dual level user selectable alarm relays and one fault relay Rated, 2amps @ ≤ 24VAC or 24VDC

2.4 Electrical Requirements

Power:	24 VDC external power. A regulated 24VDC power supply is required.
Consumption:	Approximately 200mA

2.5 Physical Characteristics

Dimensions:
Local Model Incl Sensor: 5.12 (W) x 8.25 (H) x 3.20 (D) inches; 130 x 209 x 81 mm
Remote Sensor Model: 5.12 (W) x 4.01 (H) x 3.20 (D) inches; 130 x 101.8 x 81 mm

Weight: 1.1 pounds (0.5 kg)

Enclosure Type: General purpose; not intended for explosive atmospheres.

2.6 Universal Gas Detector Default Factory settings

The Universal Gas Detector is shipped with factory defaults for the alarm relay settings. The following are the factory defaults:

Menu Function	Factory Default	Menu Defined
Set 4-20mA loop	The mA output is set at the factory using a calibrated Fluke meter.	Use this function to adjust the gas detectors 4mA, (Zero) and 20mA, (Span) to your PLC or distributive control system.
Set Formats LED and alarm relay State	Alarm 1 = Normal Alarm 2 = Normal Fault = Normal	Do you want the relays to energize, (normal) or de-energize, (fail safe) when the alarm activates?
Set Alarm Threshold Polarity	Alarm 1 = Normal Alarm 2 = Normal Audio = Normal	Do you want to alarm at a level higher, (normal) or lower, (inverted) than the alarm threshold?
Set Latching	Alarm 1 = Non-latching Alarm 2 = Non-latching Audio = Non-latching	Do you want the alarm to automatically reset? (non-latching) or do you want to manually reset the alarm? (latching)
Alarm Delay	Alarm = 5 seconds	How long do you want to wait until the relay alarms activate?
Zero Suppression	000 = 0.00ppm Refer to section 4.5.6	At what level do you want the gas monitor to display a reading?
Set Alarm Thresholds	Alarm 1 = ½ TLV Alarm 2 = TLV Audio = ½ TLV	At what level do you want to alarm?
Set Alarm Hysteresis	Alarm 1 = 0.0 % Alarm 2 = 0.0 % Audio = 0.0 %	For use when using the monitor for control of valves and process. See Section 5.5.9
Sensor Adjustment	No factory default	For use when dynamically gas calibrating the monitor to a known span gas. See Section 6.2
Manage Passwords	Factory default is **557**	For use when changing the password from factory default to a new password of your choice.

3: Installation

3.1 Site Requirements

The Universal Gas Detector enclosure should be mounted in an area free of vibration and electrical noise or interference. If possible, avoid areas with high temperatures or condensing humidity.

WARNING: ***The Universal Gas Detector is not designed for installation in hazardous areas.***

3.2 Mounting

3.2.1 Transmitter Enclosure

The Universal Gas Detector is designed primarily for wall mounting and should be installed at a height convenient for operation, maintenance, and viewing of the instrument display. The following is a drawing of the mounting dimensions.

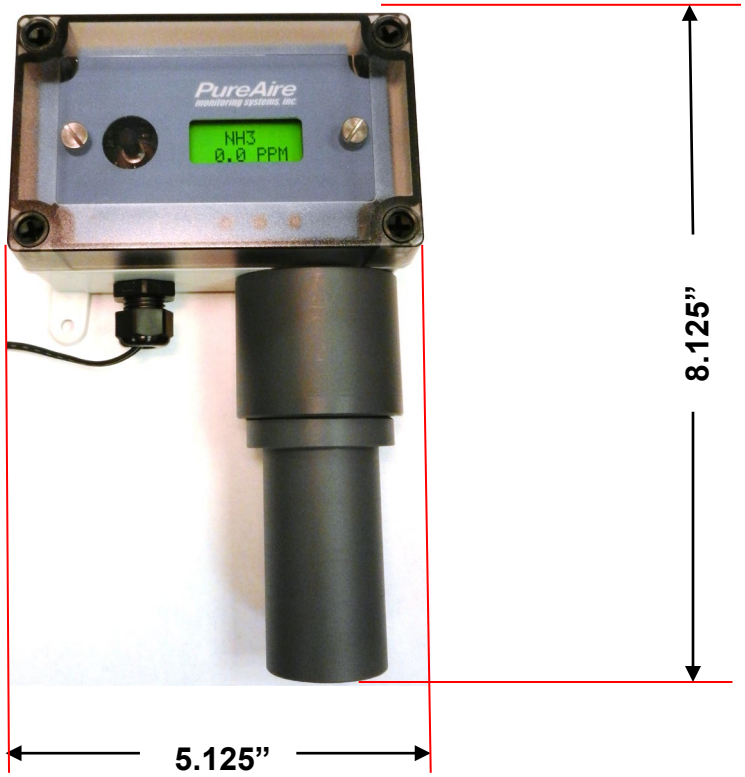

3.2.2 Universal Gas Detector

The transmitter and sensor should be installed in a location where gas leaks are likely to occur or where released gases may accumulate. It should be mounted no closer than 12 inches above floor level and no more than 45° from vertical. Airflow within the monitored area, the characteristics of the gas (lighter or heavier than air), and the position of workstations and personnel should all be considered in determining the most suitable installation location.

3.2.3 Remote Sensor

The sensor should be installed in a location where gas leaks are likely to occur or where released gases may accumulate. It should be mounted no closer than 12 inches above floor level and no more than 45° from vertical. Airflow within the monitored area, the characteristics of the gas (lighter or heavier than air), and the position of workstations and personnel should all be considered in determining the most suitable installation location.

3.3 Wiring

The Universal Gas Detector requires a single, 3-wire shielded cable for analog output and 24 VDC power input. A three-wire shielded cable; 3-conductor, 18 AWG stranded General Cable E2203S.30.860, or equivalent is recommended for the connection. The analog out and VDC power in connections are made on the terminal block inside the transmitter housing.

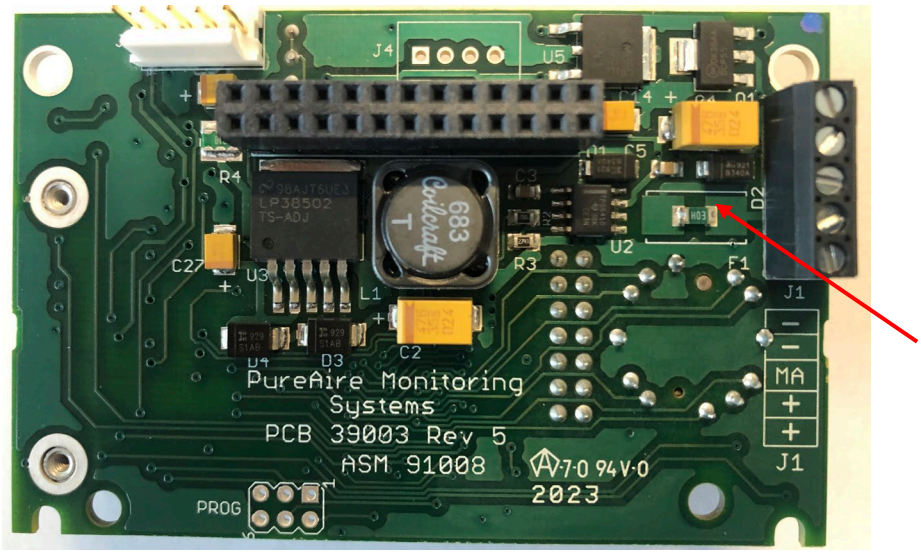

1. Power Analog output Terminal Block

Common
Common
mA output
+ 24 VDC
+ 24 VDC

3. PTC Resettable Fuse

1. **Power Analog Terminal Block** — This terminal block is where the 24VDC power and 4-20 mA analog output connection is made.

2. **Sensor Cell Connector —** This connector is where the sensor cell is connected. **NOTE: Never connect the sensor to this connector while the monitor is powered. This will damage the sensor**

3. **PTC Resettable Fuse —** The PCB is protected with a PTC Fuse that is resettable and NEVER needs to be replaced. If it trips, you will need to turn off the power to the monitor. When power resumes, the fuse will reset.

3.4 Sensor Installation

➡ **NOTE***: The following applies to the Renewable Sensor cell mounted directly to the Universal Gas Detector transmitter.*

➡ **IMPORTANT:** *Be careful not to touch the membrane on the bottom of the sensor during installation.*

➡ **CAUTION:** *The target gas is factory programmed directly into the sensor cell. When using multiple gases, please install the correct sensor into the instrument, or it will adversely affect detection reliability and/or measurement accuracy.*

1. Unpack the sensor cell from the plastic packing
2. Remove the shorting jumper from the sensor cell connector, located on the top of the sensor

• **IMPORTANT*:* Failure to remove the shorting jumper before connecting the sensor cell to the transmitter will damage the sensor cell and void your warranty.**

3. Insert the sensor cell into the cell holder on the universal transmitter. Carefully rotate the sensor to align the male pins on the sensor cell to the female pins on the sensor cell holder. Then push up to make the connection.
4. Install the sensor cell protector by rotating it clockwise to the cell holder on the universal transmitter.

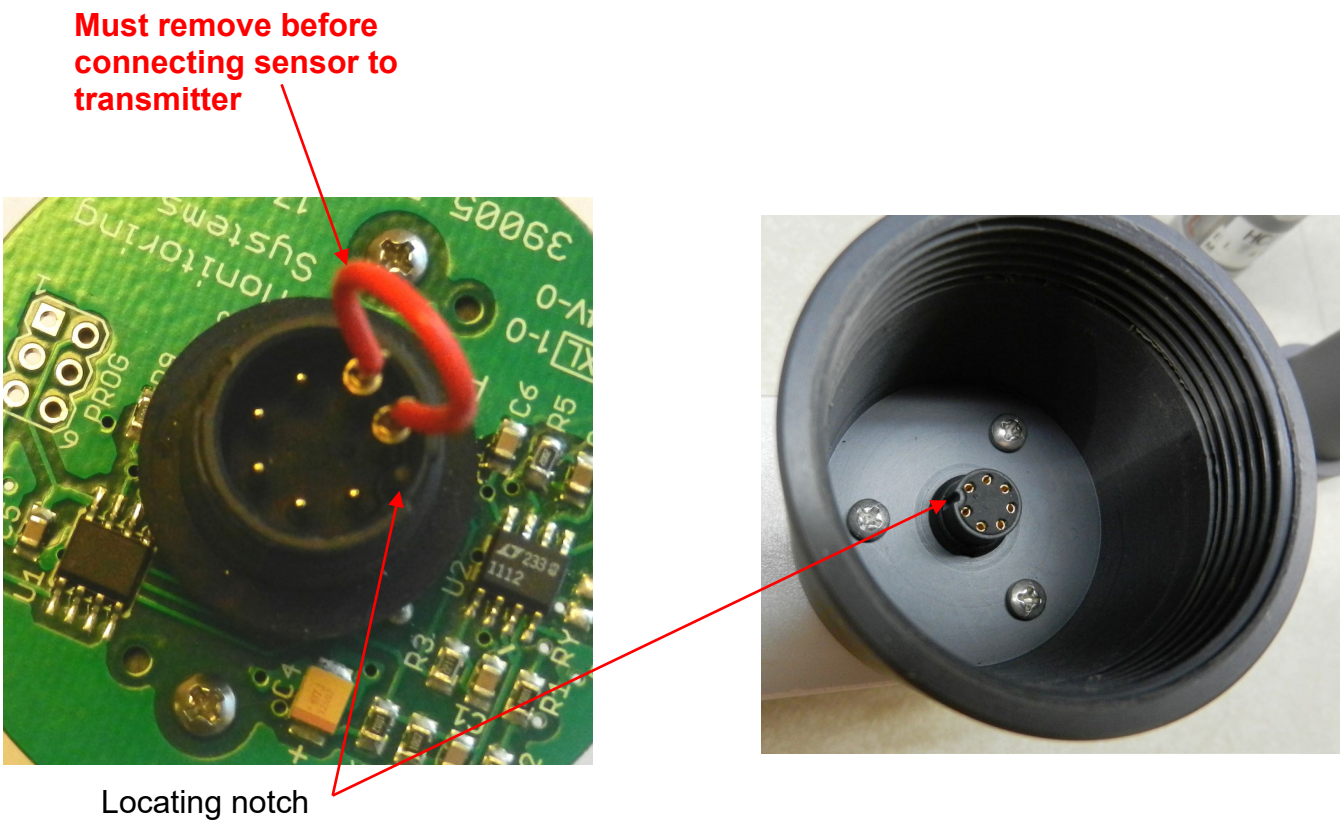

1) Insert the sensor cell into the cell holder on the Universal transmitter. Carefully rotate the sensor to align the male pins on the sensor cell to the female pins on the sensor cell holder.

NOTE: *Align the locating notch on the sensor cell with the notch on the connector inside the Cell holder*

2) Push up on the sensor to make the connection inside the Cell holder

3) Attach the Sensor Cell Protector to the transmitter by twisting it clockwise onto the Cell holder

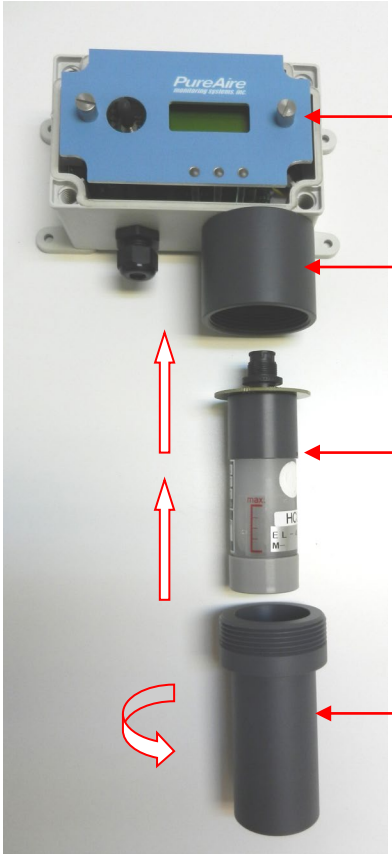

3.5 Initial Startup

Once installation of the gas detector has been completed, it is ready for startup. The following procedures should be performed before placing the instrument into operation:

1. Check the integrity of all wiring.
2. Apply 24 VDC power.
3. After power up, reset the zero. Refer to Section 6.2.4

The instrument should now be powered up. Upon power up, the Universal Gas Detector LCD displays the PureAire logo and then starts a 30 second count down. During the entire warm-up period the monitor will momentarily activate the internal relays and horn. If you have external horns and alarms connected to the detector's internal relays, they will also activate. It will also output a 2 mA signal and illuminate the fault LED. The LED will turn off at the end of the warm-up.

NOTE: After power up it is necessary to reset the zero. Refer to Section 6.2.4

NOTE: At initial power up, the internal relays and horn will activate momentarily. If you have external horns and alarms connected to the detector's internal relays, they will also activate.

Gas Name
30 WARM

4: Normal Operation

The Universal Gas Detector is a single point monitor designed for the continuous detection and measurement of ambient toxic and corrosive gas concentration levels.

4.1 Signal Outputs

The Universal Gas Detector outputs a continuous 4-20 mA analog signal proportional to the measured concentration of toxic or corrosive gas. 4 mA represents 0 ppm, and 20 mA represents full scale ppm of the gas being detected. In the event of a system fault, a specific factory defined code will be displayed on the local digital display. This code will indicate the exact nature of the system fault.

4.2 Instrument Faults

The Universal Gas Detector incorporates a number of self-checking features to ensure reliable operation. In the event that a fault condition is detected, the analog output signal is altered: A few common error codes are displayed in the following table:

Condition	Analog Signal
**Supply Voltage Out of Range Fault code 16	Analog output drops to 2 mA
Sensor cell cable cut	Analog output drops to 2 mA
***Communications Error with Sensor Cell Missing Fault Code 01	Analog output drops to 2 mA (0 mA on request) Fault Relay activates
System Warm Up	Analog output drops to 2 mA Fault Relay activates and turns off when system is in the measurement mode

NOTE*:* All system faults are displayed on the front panel. Each fault has its own specific code to identify the specific problem. Please contact PureAire whenever a fault is displayed.

**** When using your own power supply please ensure that the voltage is regulated to 24VDC +/- 0.5 volts. If the voltage is too low or high you will activate a "Supply Voltage Out of Range fault and disable the monitor.**

***** If the monitor is in alarm Do Not unplug the Sensor cell. If the monitor is in alarm and the sensor cell is unplugged, the alarms and audible horn <u>will remain activated</u>. Resetting the alarms will require a complete power down.**

NOTE: *If a Fault condition clears itself, (Yellow LED is no longer illuminated) The Fault message <u>will continue to scroll</u> until manually cleared.*

To clear the fault message, ***push the joystick down*** ↓ ***(- Minus)***

4.3 Routine Maintenance Schedule

Continuous gas detection systems depended upon to measure and detect hazardous gas leaks in the workplace requires periodic maintenance to ensure proper operation. The frequency with which this routine maintenance is required depends on the environment. The following table is intended to serve as a general guideline for routine maintenance. The conditions in your application, as well as your organization's maintenance policies, will ultimately determine the best routine maintenance schedule for your equipment. Routine Visual Checks

4.3.1 Recommended Routine Maintenance Schedule

Routine Visual Checks **Every 6 - 12 months**

* The LCD display should indicate the monitored gas and a 0ppm level. The Alarm 1, Alarm 2 and Fault relays should not be illuminated. If connected to a PLC or SCADA system, a 4mA signal will be output at a 0ppm concentration.

Sensor Verification with span gas **Every 6 - 12 months**

4.4 Loss of Power Indicator

In the event the Universal Gas Detector loses 24VDC power, the 4-20 mA analog output signal drops to 0mA. The LCD display will also display a blank screen.

4.5 Alarm Reset

Whenever the detector alarms are activated, the built-in alarm relays, panel mounted LED's and audio horn will also activate. When the relay settings are non-latching, the alarm relays, LEDs, and horn will automatically reset. If the relay settings are latching, then a manual reset of the alarms are required. Resetting the alarms can be performed through use of the joystick or using the remote reset function.

Joystick – You must enter the password to enter the reset function. After the password is entered and accepted, push the joystick in; (enter) to reset the alarms.

Remote Reset – See section1.2.5. for location of the terminal block. The alarm relay board has a two-pin connector for wiring to a remote switch. When connected to a switch, this remote reset will bypass the joystick and a password will not be needed to reset the alarms.

NOTE*:* The gas levels must recover below the alarm thresholds before the horn can be reset from the remote reset switch or joystick.

5: Universal Gas Detector Programming

The Universal Gas Detector is supplied with user selectable settings to adjust the alarm settings, 4 and 20mA output and minor sensor adjustments. The settings are arranged in menus that are accessed by moving the joystick. To access the menus a factory set password is used.

NOTE: The Universal Gas Detector will continuously monitor gas while accessing the menus. **The alarm, fault relays and mA output are all active and on line while making any changes to the menus.**

5.1 Joystick Operation

The Universal Gas Detector uses a 4-position joystick with a center pushbutton for selecting menus and changing values. The joystick is programmed to standard protocol as follows:

NOTE: *The joystick has a built-in delay to prevent accidental tampering of the menus. Deliberate entries are required.*

CAUTION: *Only qualified personnel should perform programming, maintenance, and sensor verification.*

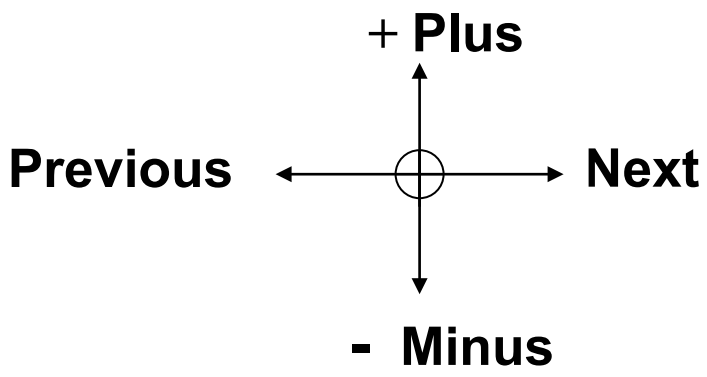

Plus – Pushing the joystick in this direction increases the value

Minus – Pushing the joystick in this direction decreases the value

Next – Pushing the joystick in this direction moves you to the next level of the menu hierarchy.

Previous – Pushing the joystick in this direction takes you out to the last level of menu hierarchy.

Enter – Pushing the joystick directly in the center enters the information into the microprocessor

5.2 Program Flowchart

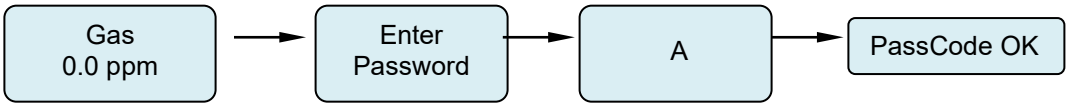

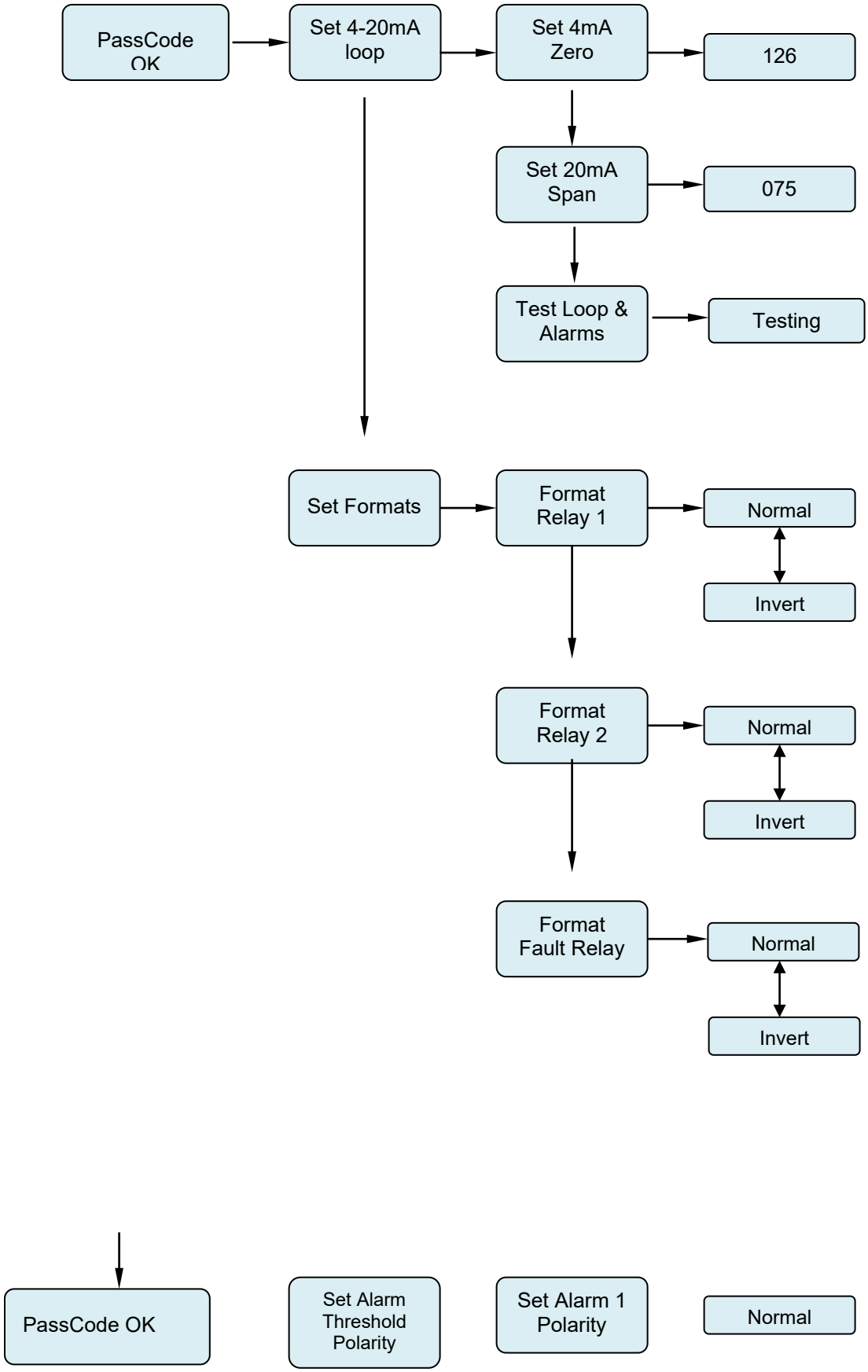

NOTE: All numerical values shown are only examples and are not Factory Defaults

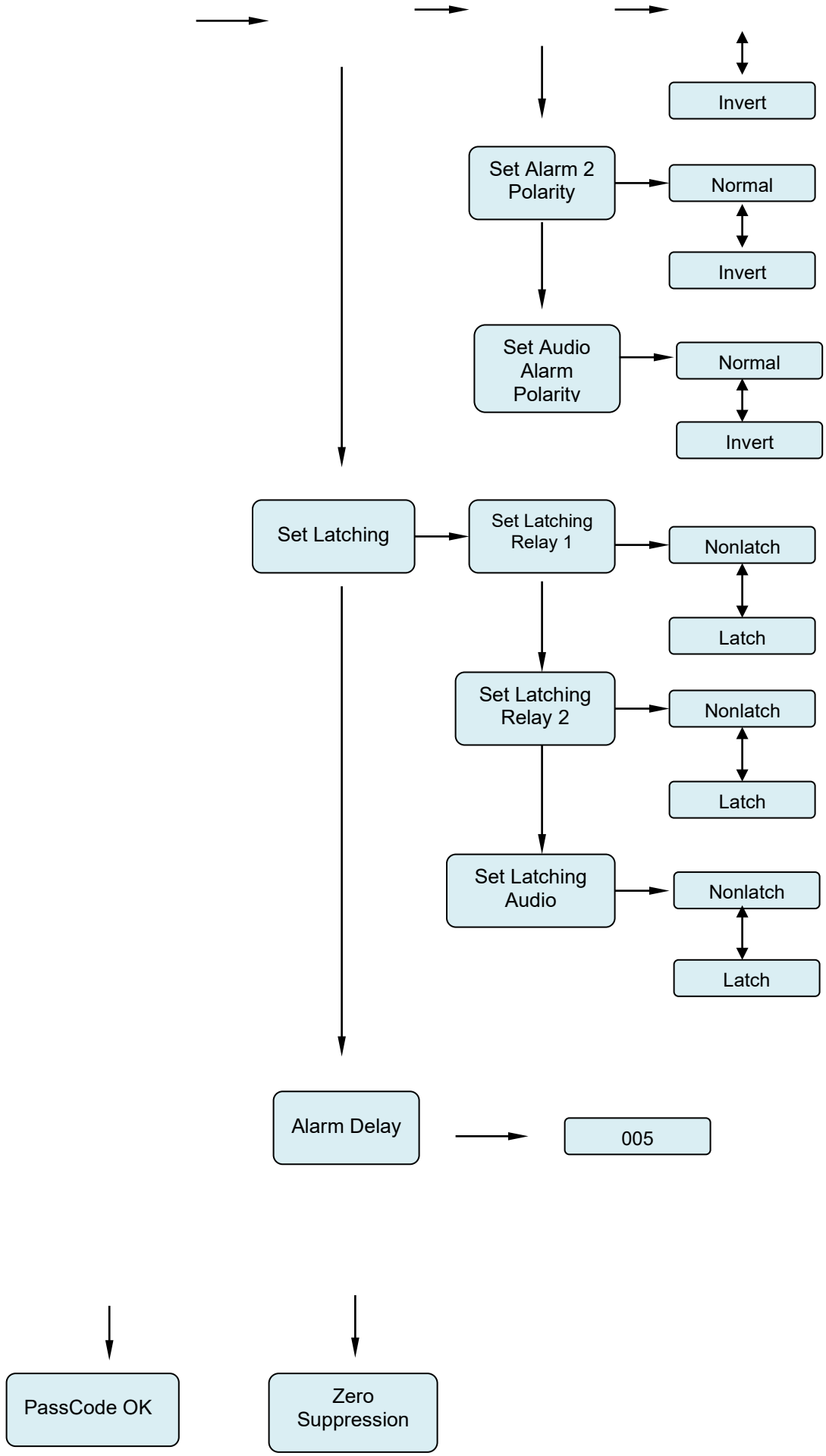

NOTE: All numerical values shown are only examples and are not Factory Defaults

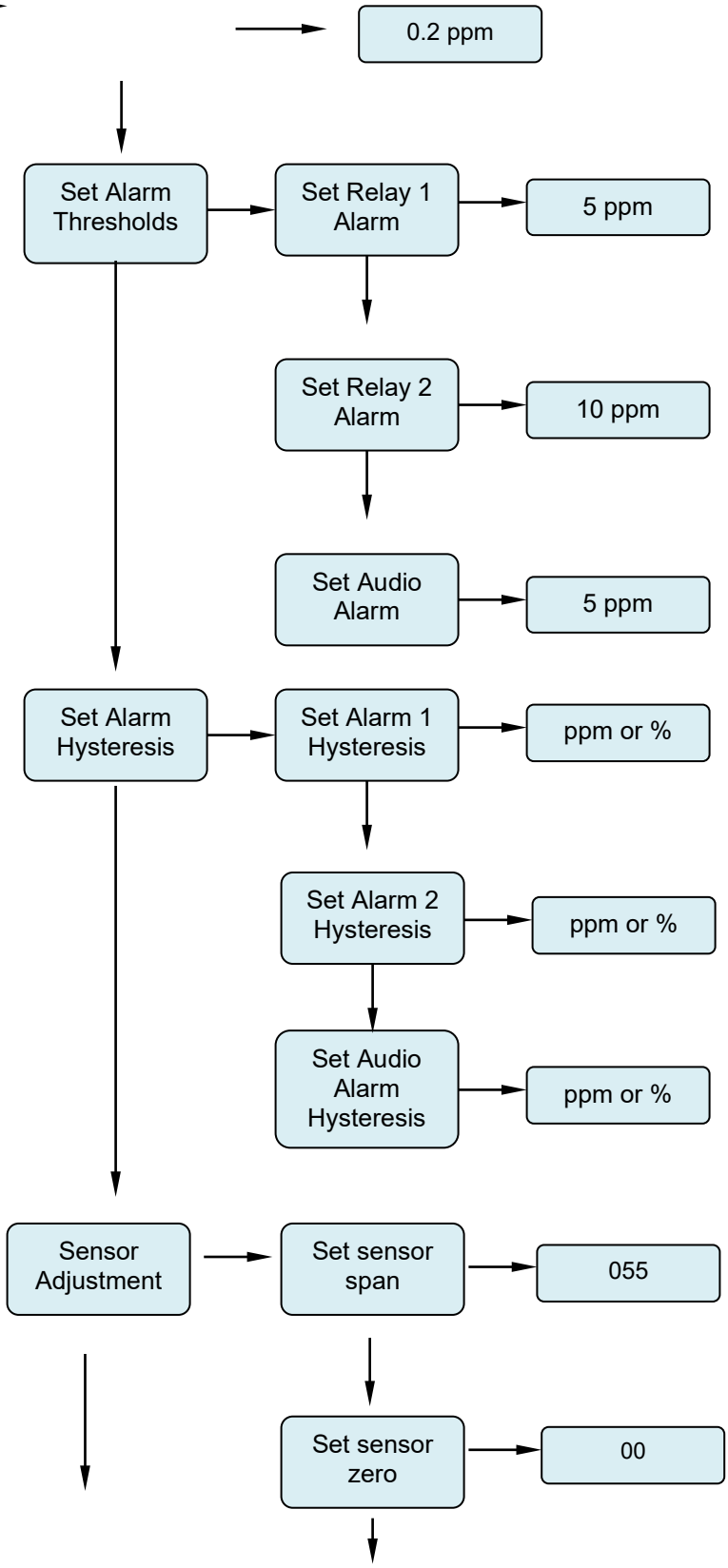

NOTE: All numerical values shown are only examples and are Not Factory Defaults

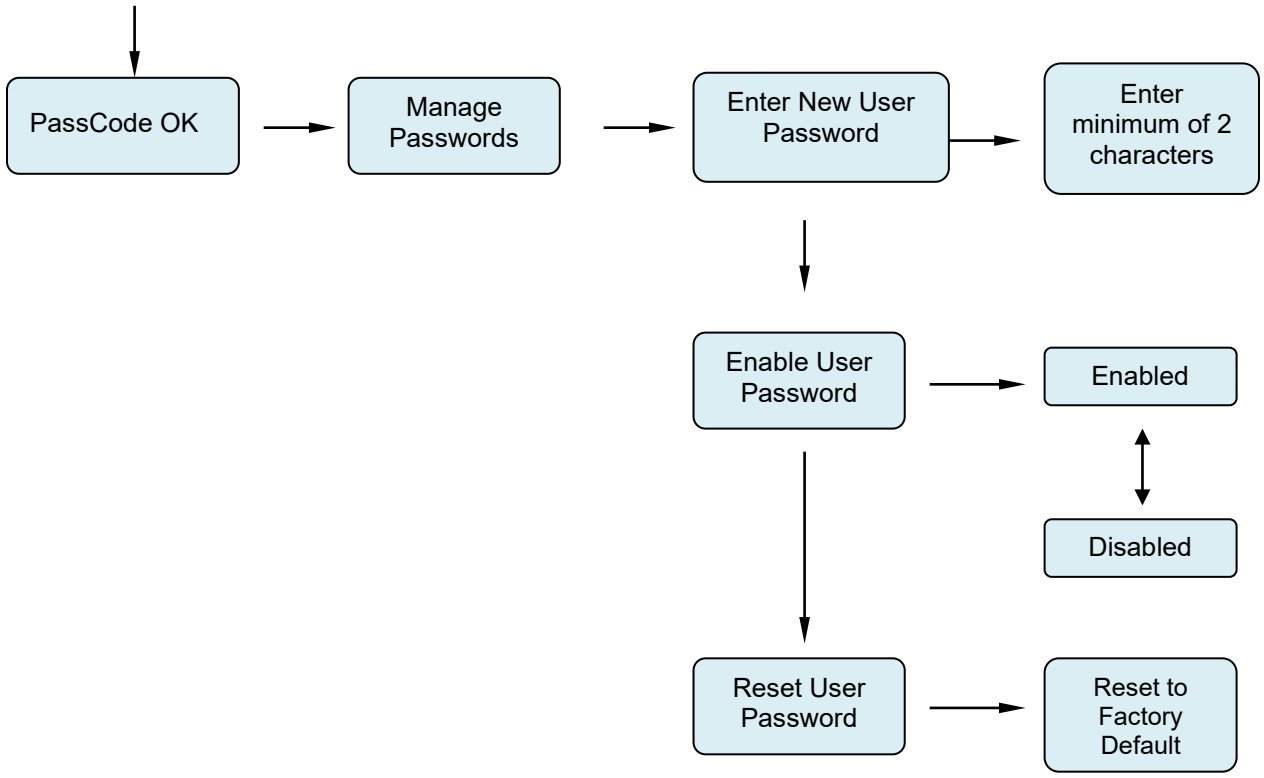
PassCode OK
Manage Passwords
Enter New User Password
Enter minimum of 2 characters
Enable User Password
Enabled
Disabled
Reset User Password
Reset to Factory Default

5.3 Entering the Password

The Universal Gas Detector is supplied with a factory set password to prevent unauthorized access to the menus. **The Password is 557.** The following explains how to enter the password.

1. Push the joystick once to the right. **Enter Password** will scroll on the first line of the digital display. The second line will still display the current Universal Gas Detector levels.

   ..Enter password…
   0.0 ppm

2. Push the joystick again once more to the right to enter the input screen. **The letter A will appear and flash.**

   A
   0.0 ppm

   NOTE: *The display has characters that start with A through Z and 0 through 9. Pushing the joystick up or down will permit you to scroll through the alphanumeric characters.*

3. Push the joystick up or down to enter the first digit. The display is an alphanumeric display and toggles from A through Z followed by 0 to 9. The character to be entered will flash.

   5
   0.0 ppm

4. Push the joystick again to the right to select the second entry. Push the joystick up or down to select the second digit. The character being entered will flash and the first character entered will remain lit.

   55
   0.0 ppm

5. Push the joystick again to the right to select the third entry. Push the joystick up or down to select the third and final digit. The character being entered will flash and the first and second characters entered will remain lit. You are now ready to enter the 3-digit password.

   557
   0.0 ppm

6. Push the joystick in the center to enter the password. If you entered it correctly the display will scroll **Password OK.**

   ...PassCode
   OK……

NOTE: If an incorrect password has been entered, the display will indicate Password Failed. Push the joystick to the left to access the monitoring mode. From this mode you can reenter the password again.

5.4 Changing the User Password

The Universal Gas Detector is supplied with a factory set password to prevent unauthorized access to the menus. The user can change this password and the following explains how to change the password. **NOTE: the minimum number of characters required for a valid password is two.**

1. Push the joystick down to access the **Manage Passwords Menu**. **Manage Passwords** will scroll on the first line of the digital display. The second line will still display the current Universal Gas Detector levels.

..Manage Passwords…
0.0 ppm

2. Push the joystick to the right to enter the input screen. **Enter New User Password** will scroll on the first line of the digital display

…Enter New User Password…
0.0 ppm

3. Push the joystick to the right to enter the input screen. **The letter A will appear and flash.**

A
0.0 ppm

NOTE: *The display has characters that start with A through Z and 0 through 9. Pushing the joystick up or down will permit you to scroll through the alphanumeric characters.*

4. Push the joystick up or down to enter the first digit. The display is an alphanumeric display and toggles from A through Z followed by 0 to 9. The character to be entered will flash.

2
0.0 ppm

5. Push the joystick again to the right to select the second entry. Push the joystick up or down to select the second digit. The character being entered will flash and the first character entered will remain lit.

25
0.0 ppm

Push the joystick again to the right to select the third entry. Push the joystick up or down to select the third and final digit. The character being entered will flash and the first and second characters entered will remain lit. You are now ready to enter the 3-digit password.

253
0.0 ppm

7. Push the joystick in the center to enter the password. This will display the next command, **Re-Enter New Password**

…Re-Enter New Password...
0.0 ppm

8. Push the joystick to the right to enter the input screen. **The letter A will appear and flash.**

A
0.0 ppm

9. Push the joystick up or down to enter the first digit. The display is an alphanumeric display and toggles from A through Z followed by 0 to 9. The character to be entered will flash.

2
0.0 ppm

10. Push the joystick again to the right to select the second entry. Push the joystick up or down to select the second digit. The character being entered will flash and the first character entered will remain lit.

25
0.0 ppm

11. Push the joystick again to the right to select the third entry. Push the joystick up or down to select the third and final digit. The character being entered will flash and the first and second characters entered will remain lit. You are now ready to enter the 3-digit password.

253
0.0 ppm

12. Push the joystick in the center to enter the password. If you entered it correctly the display will scroll **"New Password Entry OK".**

…New Password Entry OK…
0.0 ppm

NOTE: If on the second entry the password entered was different from the first, the display will take you back to the "Re-enter Password Screen". You will need to repeat steps 2 through 11. If you do not enter the password correctly, the monitor remembers the last password that was properly input.

5.4.1 Enable User Password

This menu permits the user to activate or disable the password function on the Universal Gas Detector. Push the joystick down. **"Enable User Password"** will scroll on the first line of the digital display

…Enable User Password…
0.0 ppm

Push the joystick right to display the status. If enabled it will display **"Enabled"**

Enabled
0.0 ppm

Push the joystick up or down to change the status. Once enabled or disabled is selected, Push the joystick in the center to enter the new status. If correctly entered the display will scroll **"Enable User Password"**

…Enable User Password…
0.0 ppm

5.4.2 Reset User Password

This menu permits you to reset the password back to 557, as set at the factory.

…Reset User Password…
0.0 ppm

Push the joystick right to display the menu, **"Reset to factory Default".**

…Password Reset to factory Default…
20.9%

Push the joystick in, (like a doorbell) to reset the password back to 557.
Push the joystick left 4 times to go back to the measuring mode.

NOTE: If you lose your password please contact PureAire with your serial number or DTM number

Gas
0.0 ppm

5.5 Entering the Menus

The Universal Gas Detector is supplied with main menus with sub menus to adjust mA outputs, alarm relay settings, sensor adjustments and zero suppression for toxic and corrosive gas sensor cells.

5.5.1 Set 4.20mA Loop

.Set 4-20mA loop..
0.0 ppm

This main menu will permit the adjusting of the 4mA and 20mA output from the Universal Gas Detector. It also provides a function that will send an actual output between 4mA and 20 mA to test any remote control and alarm system attached to the detector.

NOTE: *To read the mA output, Universal Gas Detector monitor must either be connected to a remote PLC controller or SCADA system. You can also connect the Universal Gas Detector to a voltmeter to read the mA output. Please consult PureAire for more information.*

From this main menu, pushing the joystick to the right will select the sub menu and the digital display will scroll the following:

..Set 4mA Zero…
0.0 ppm

This is the menu at which to adjust the 4mA output being sent from the Universal Gas Detector. To change the 4 mA output, push the joystick right to display the 4 mA Zero setting. The display will indicate a value between 0 and 255 counts. Pushing the joystick up increases the value and pushing the joystick down decreases the value. The 4mA output being sent from the Universal Gas Detector will change as the number on the digital display changes. Push the joystick left once to enter the setting.

255
0.0 ppm

Pushing the joystick to the left also brings you back to the pervious Main menu. The digital display will scroll the following:

...Set 4mA zero…..
0.0 ppm

Push the joystick down to access the next sub menu; **Set 20mA Span will scroll.**

...Set 20mA Span…
0.0 ppm

This is the menu at which to adjust the 20mA output being sent from the Universal Gas Detector. To change this value, push the joystick right to display the 20mA span setting. The display will indicate a value between 0 and 255 counts. Pushing the joystick up increases the value and pushing the joystick down decreases the value. The 20mA output being sent from the Universal Gas detector will change as the number on the digital display changes. Push the joystick left once to enter the setting.

255
0.0 ppm

Pushing the joystick to the left also brings you back to the pervious Main menu. The digital display will scroll the following:

...Set 20mA Span….
0.0 ppm

Push the joystick down to access the next sub menu; **Test Loop and Alarms will scroll.**

….Test loop and alarms….
0.0 ppm

This is the menu at which to test the entire 4 and 20mA output range being sent from the Universal Gas Detector. To enter the menu, push the joystick right. The display will indicate **Testing**. The display will indicate a value between 0.0 ppm and full scale ppm reading. Pushing the joystick up slowly increases the ppm value. From a 0.0ppm indication, pushing the joystick down will immediately display a full scale ppm reading and quickly activate the alarm relays and internal horn. Continuing to push the joystick down will slowly decrease the ppm value. The mA output will change as the ppm indication on the digital display changes and the alarm relays and internal horn will activate when alarm thresholds have been exceeded. Push the joystick left once to exit this menu and reset the mA output back to 4mA, (0.0ppm)

...Testing…..
0.0 ppm

NOTE: The mA output automatically resets back to 4mA, (0.0ppm) when you exit the Testing menu.

5.5.2 Set Formats

This is the menu at which to adjust the relay states for the two gas alarm relays and the individual instrument fault relay.

Push the joystick down to access the next main menu, **Set Formats.** The display will scroll the following:

…Set Formats…
0.0 ppm

This menu will permit the setting of the two alarm relays and the fault relay settings from normally de-energized state, **Normal**, to normally energized state, **Inverted.**

From this main menu, pushing the joystick to the right will select the sub menu and the digital display will scroll the following:

..Format Relay 1…
0.0 ppm

This is the menu at which to adjust the first level alarm relay state on the Universal Gas Detector. To change this value, push the joystick right to display the relay state. The display will indicate **NORMAL.** Pushing the joystick down will change the relay state from NORMAL to INVERT. *(NOTE: If inverted, the Alarm 1 LED will illuminate).* Push the joystick left once to exit this menu.

NORMAL
0.0 ppm

↕

INVERT
0.0 ppm

After entering the relay state by pushing the joystick left, the display will default back to the Set Formats Relay 1menu. The display will scroll the following:

..Format Relay 1…
0.0 ppm

Push the joystick down to access the next menu, **Format Relay 2.** The display will scroll the following:

… Format Relay 2..
0.0 ppm

This is the menu at which to adjust the second level alarm relay state on the Universal Gas Detector. To change this value, push the joystick right to display the relay state. The display will indicate **NORMAL.** Pushing the joystick down will change the relay state from NORMAL to INVERT. *(NOTE: If inverted, the Alarm 2 LED will illuminate).* Push the joystick left once to exit this menu.

NORMAL
0.0 ppm

↕

INVERT
0.0 ppm

After entering the relay state by pushing the joystick left, the display will default back to the Set Formats Relay 2 menu. The display will scroll the following:

.. Format Relay 2 …
0.0 ppm

Push the joystick down to access the next menu, **Format Fault Relay.** The display will scroll the following:

..Format Fault Relay …
0.0 ppm

This is the menu at which to adjust the fault alarm relay state on the Universal Gas Detector. To change this value, push the joystick right to display the relay state. The display will indicate **NORMAL.** Pushing the joystick down will change the relay state from NORMAL to INVERT. *(NOTE: If inverted, the Fault Alarm LED will illuminate).* Push the joystick left once to exit this menu

NORMAL
0.0 ppm

↕

INVERT
0.0 ppm

After entering the relay state by pushing the joystick left, the display will default back to the Format Fault Relay menu. The display will scroll the following:

..Format Fault Relay...
0.0 ppm

5.5.3 Set Alarm Threshold Polarity

Alarm Threshold Polarity determines if an alarm concentration is set above or below a threshold value. For example, if an alarm of 5.0 ppm for Chlorine is selected, the Alarm Threshold Polarity must be set to **Normal** for the monitors alarm to activate when the gas concentration exceeds or goes above 5.0 ppm. This menu will permit the selection of the alarm polarity. To access this menu from the "Set Formats" menu, push the joystick down to display the **Set Alarm Threshold Polarity** menu. The display will scroll the following:

..Set Alarm Threshold Priority..
0.0 ppm

Push the joystick right to access the first sub menu; **Set Alarm 1 Polarity** will scroll on the display. This is the menu at which to adjust the first level alarm polarity state on the Universal Gas Detector.

..Set Alarm 1 Polarity...
0.0 ppm

To change this value, push the joystick right to display the relay state. The display will indicate **NORMAL.** Pushing the joystick down will change the relay state from NORMAL to INVERT.

NORMAL
0.0 ppm

↕

INVERT
0.0 ppm

After entering the relay state by pushing the joystick left, the display will default back to the Set Alarm 1 Polarity menu. The display will scroll the following:

..Set Alarm Polarity..
0.0 ppm

Push the joystick down to access the next sub menu; **Set Alarm 2 Polarity** will scroll on the display. This is the menu at which to adjust the second level alarm polarity state on the Universal Gas Detector.

..Set Alarm 2 Polarity ..
0.0 ppm

To change this value, push the joystick right to display the relay state. The display will Indicate **NORMAL** Pushing the joystick down will change the relay state from NORMAL to INVERT.

NORMAL
0.0 ppm

↕

INVERT
0.0 ppm

After entering the relay state by pushing the joystick left, the display will default back to the Set Alarm 2 Polarity menu. The display will scroll the following:

..Set Alarm 2 Polarity..
0.0 ppm

Push the joystick down to access the next sub menu; **Set Audio Alarm Polarity** will scroll on the display. This is the menu at which to adjust the second level alarm polarity state on the Universal Gas Detector.

..Set Audio Alarm Polarity...
0.0 ppm

To change this value, push the joystick right to display the relay state. The display will Indicate **NORMAL.** Pushing the joystick down will change the relay state from NORMAL to INVERT.

NORMAL
0.0 ppm

↕

INVERT
0.0 ppm

After entering the relay state by pushing the joystick left, the display will default back to the Set Audio Alarm Polarity menu. The display will scroll the following:

..Set Audio Alarm Polarity...
0.0 ppm

5.5.4 Set Latching

This is the menu at which to adjust the relay alarm state for the two gas alarm relays and the individual instrument fault relay. The selection permits setting the relays to a latching or non-latching state. In a latching state, the relay will remain activated until the user manually resets the alarm by entering the password and selects the Enter Key. In a non-latching state, the alarm relay will automatically reset once the gas concentration has returned to below the alarm threshold. To access this menu, push the joystick down to display the **Set Latching** menu. The display will scroll the following:

.Set Latching…
0.0 ppm

Push the joystick right to access the first sub menu; **Set Latching Relay 1** will scroll on the display. This is the menu at which to adjust the first level alarm latching state on the Universal Gas Detector.

..Set Latching Relay 1…
0.0 ppm

To change this state, push the joystick right to display the relay state. The display will Indicate **NONLATCH.** Pushing the joystick down will change the relay state from NONLATCH to LATCHING.

NONLATCH
0.0 ppm

↕

LATCHCING
0.0 ppm

After entering the relay state by pushing the joystick left, the display will default back to the Set Latching Relay 1 menu. The display will scroll the following:

..Set Latching Relay 1.…
0.0 ppm

Push the joystick down to access the next sub menu; **Set Latching Relay 2** will

scroll on the display. This is the menu at which to adjust the second level alarm state on the Universal Gas Detector.

..Set Latching Relay 2…
0.0 ppm

This is the menu at which to adjust the second level alarm relay state on the Universal Gas Detector. To change this value, push the joystick right to display the relay state. The display will indicate **NONLATCH.** Pushing the joystick down will change the relay state from NONLATCH to LATCHING.

LATCHING
0.0 ppm

↕

NONLATCH
0.0 ppm

After entering the relay state by pushing the joystick left, the display will default back to the Set Latching Relay 2 menu. The display will scroll the following:

..Set Latching Relay 2…
0.0 ppm

Push the joystick down to access the next sub menu; **Set Latching Audio Alarm** will scroll on the display. This is the menu at which to adjust the Audio alarm relay state on the Universal Gas Detector.

..Set Latching Audio Alarm…
0.0 ppm

This is the menu at which to adjust the Audio alarm relay state on the Universal Gas Detector. To change this value, push the joystick right to display the relay state. The display will indicate **NONLATCH.** Pushing the joystick down will change the relay state from NONLATCH to LATCHING.

NONLATCH
0.0 ppm

↕

LATCHING
0.0 ppm

After entering the relay state by pushing the joystick left, the display will default back

to the Set Latching Audio Alarm menu. The display will scroll the following:

..Set Latching Audio Alarm…
0.0 ppm

5.5.5 Resetting a Latching Alarm

To reset a latching alarm relay, you must enter the password correctly and then push the joystick IN to enter the reset command. The Universal Gas Detector also has an internal 2-pin terminal block for connecting a remote reset switch. (See Alarm Relay board, section 1.2.7)

5.5.6 Set Alarm Delay

Push the joystick down to access the next main menu, **Alarm Delay.** The display will scroll the following:

…Alarm Delay…
0.0 ppm

This is the amount of time an alarm level concentration of gas must be present before the instrument's gas concentration alarm(s) will be activated. This menu will permit setting a user selected time delay for activating alarm relays 1 and 2. You can select from 0 seconds up to 255 seconds after an alarm level has been exceeded before the alarm relays will activate.

To change this value, push the joystick right to display the Alarm Delay screen. The display will indicate a value between 0 and 255 seconds. Pushing the joystick up increases the value and pushing the joystick down decreases the value.

005
0.0 ppm

After entering the delay time pushing the joystick left, the display will default back to the Alarm Delay menu. The display will scroll the following:

…Alarm Delay…
0.0 ppm

NOTE: *Setting the alarm delay will operate simultaneously for both alarms 1 and 2. There is no delay for the fault relay. Any system fault will immediately activate the Fault Relay.*

5.5.7 Set Zero Suppression

This menu is provided to decrease the sensitivity of selected gas sensors. It essentially programs the instrument to ignore gas measurements that are below the programmed ppm level.

➡ **EXAMPLE:** *If the measurement range of the instrument is 0 to 10 ppm, gas measurements below 0.5 ppm will be displayed and output as 0 (zero) when the zero-suppression level is set at 0.5ppm*

Push the joystick down to access the next main menu, **Zero Suppression.** The display will scroll the following:

…Zero Suppression…
0.0 ppm

To change this value, push the joystick right to display the Zero Suppression screen. The display will indicate a value between 0 and 255 seconds. Pushing the joystick up increases the value and pushing the joystick down decreases the value.

0.5 ppm
0.0 ppm

After entering the zero suppression ppm, pushing the joystick left, the display will default back to the Zero Suppression menu. The display will scroll the following:

…Zero Suppression…
0.0 ppm

5.5.8 Set Alarm Thresholds

This main menu will permit adjusting the gas ppm concentration that will activate alarm levels 1, 2 and Audio alarm relays. Push the joystick down to access the main menu, **Set Alarm Thresholds.** The display will scroll the following:

..Set Alarm Thresholds..
0.0 ppm

To change these values, push the joystick right to display the **Set Relay 1 Alarm Threshold**. The display will scroll the following

..Set Relay 1 Alarm Threshold…
0.0 ppm

This is the gas concentration at which the instrument's first level alarm will be activated. To change the displayed value, push the joystick to the right to display the first level alarm setting. The display will indicate a value between 0.0 ppm and the full scale of the monitor. Pushing the joystick up increases the value and pushing the joystick down decreases the value.

5ppm
0.0ppm

After entering the alarm threshold value, pushing the joystick left, the display will default back to the Set Relay 1 Alarm Threshold menu. The display will scroll the following:

..Set Relay 1 Alarm Threshold…
0.0 ppm

Push the joystick down to access the next sub menu; **Set Relay 2 Alarm Threshold,** will scroll on the digital display.

..Set Relay 2 Alarm Threshold…
0.0 ppm

This is the gas concentration at which the instrument's second level alarm will be activated. To change the displayed value, push the joystick to the right to display the second level alarm setting. The display will indicate a value between 0.0 ppm and full scale of the monitor. Pushing the joystick up increases the value and pushing the joystick down decreases the value.

10.0ppm
0.0ppm

After entering the alarm threshold value, pushing the joystick left, the display will default back to the Set Relay 2 Alarm Threshold menu. The display will scroll the following:

..Set Relay 2 Alarm Threshold…
0.0ppm

Push the joystick down to access the next sub menu; **Set Audio Alarm Threshold,** will scroll on the digital display.

..Set Audio Alarm Threshold…
0.0ppm

This is the gas concentration at which the instrument's audio alarm will be activated. To change the displayed value, push the joystick to the right to display the Audio alarm setting. The display will indicate a value between 0.0ppm and full scale of the monitor. Pushing the joystick up increases the value and pushing the joystick down decreases the value.

5ppm
0.0ppm

NOTE: ***The audio can be set into only one alarm level. You can choose between alarm level 1 or alarm level 2 or set a completely different setting.***

After entering the audio alarm threshold value, pushing the joystick left, the display will default back to the Set Audio Alarm Relay Threshold menu. The display will scroll the following:

..Set Audio Alarm Threshold…
0.0ppm

5.5.9 Set Alarm Hysteresis

PureAire's Universal Gas Detector may be used as a control system. When used to regulate gas levels the need of a dead band, "hysteresis" may be required for the alarm relays. This menu will permit the setting of the alarm hysteresis to a desired gas concentration. When using hysteresis, the alarm set point now becomes an average alarm setting for an action to occur. When adding the hysteresis value to the alarm set point, this then defines the alarm and dead band for an action to occur.

For example, if you require a fan to turn on at a 5ppm level and to turn off at a 4.5ppm level, you will set the Alarm Threshold at 5ppm and set the hysteresis value at 0.5ppm (Average Alarm set point = 5.0ppm - Hysteresis 0.5ppm = 4.5ppm Fan Off)

To access this menu, push the joystick down to display the **Set Alarm Hysteresis** menu. This will scroll on the digital display.

..Set Alarm Hysteresis…
0.0ppm

To change these values, push the joystick right to display the **Set Alarm 1 Hysteresis.**

..Set Alarm 1 Hysteresis…
0.0ppm

Pushing the joystick again to the right will display a value 0.0ppm (factory default). Pushing the joystick up increases the percentage up to a maximum value of the full

range for the monitor. Adjust the digital display until the desired hysteresis value is selected

0.5ppm
0.0ppm

After entering the alarm 1 hysteresis, pushing the joystick left, the display will default back to the Set Alarm Hysteresis menu. The display will scroll the following:

..Set Alarm 1 Hysteresis…
0.0ppm

Push the joystick down to access the next sub menu; **Set Alarm 2 Hysteresis** will scroll on the digital display.

..Set Alarm 2 Hysteresis…
0.0ppm

Pushing the joystick again to the right will display a value 0.0ppm (factory default). Pushing the joystick up increases the percentage up to a maximum value of the full range for the monitor. Adjust the digital display until the desired hysteresis value is selected

0.2ppm
0.0ppm

After entering the alarm 2 hysteresis, pushing the joystick left, the display will default back to the Set Alarm 2 Hysteresis menu. The display will scroll the following:

..Set Alarm 2 Hysteresis…
0.0ppm

Push the joystick down to access the next sub menu; **Set Alarm Audio Hysteresis** will scroll on the digital display.

..Set Audio Alarm Hysteresis…
0.0ppm

Pushing the joystick again to the right will display a value 0.0ppm (factory default). Pushing the joystick up increases the percentage up to a maximum value of the full range for the monitor. Adjust the digital display until the desired hysteresis value is selected

0.5ppm
0.0ppm

After entering the audio alarm hysteresis, pushing the joystick left, the display will default back to the Set Audio Alarm Hysteresis menu. The display will scroll the following:

```
..Set Audio Alarm Hysteresis…
0.0ppm
```

5.5.10 Set Sensor Adjust

This menu will permit calibrating the Universal Gas Detector to a known span gas concentration. It is recommended to calibrate the detector every six months or anytime the sensor cell electrolyte is replaced. For a complete explanation of the sensor cell calibration procedure refer to Section 6.2

5.5.11 Main Operation Mode

To select the main menu from any sub menu, push the joystick left until the Main Me appears. The digital display will indicate the following:

```
GAS NAME
0.0ppm
```

6: Maintenance & Sensor Verification

Only qualified personnel should perform maintenance and sensor verification.

NOTE: *Please see the appendix for a list of sensor cell replacement parts.*

6.1.1 Sensor Cell Recharge

1. Remove the sensor cell from the Universal Gas Detector or duct.
2. Remove the box nut, membrane retainer ring, membrane, O-ring, and silicon sheet, (if provided)
3. Do not remove the cell from the mounting ring

NOTE: The O-rings can be either black or white.

NOTE: Some sensor cells have a clear silicone diffuser installed inside the Membrane Retaining Ring.

DO NOT REMOVE IT

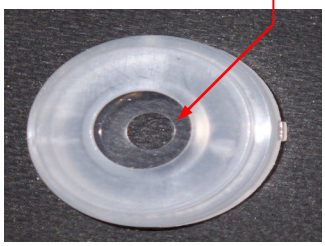

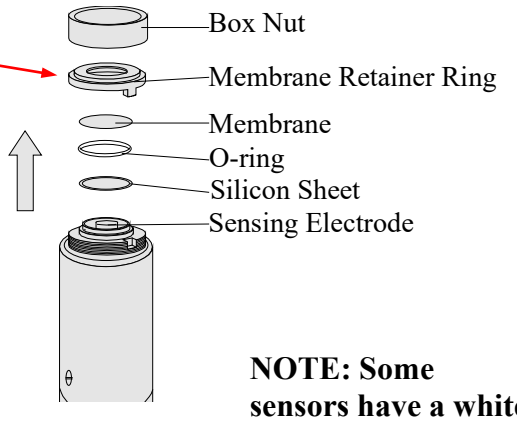

NOTE: Some sensors have a white miliseal attached to the box nut.

DO NOT REMOVE IT

4. Place the sensor over the beaker as shown and pour the old electrolyte into the beaker.

NOTE: The sensor has a breather plug on the side of the sensor.

It is covered with a white membrane, the Miliseal, p/n SC2009

DO NOT REMOVE THE MILISEAL OR BREATHER PLUG

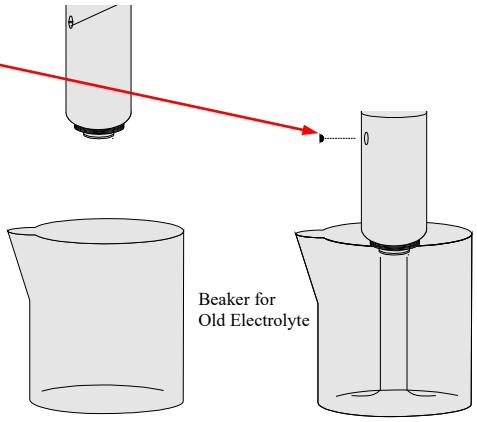

5. Hold the sensor in your hand with the sensing electrode up. Pour 10 cc's of fresh electrolyte into the sensor and rinse. Discard into the beaker.

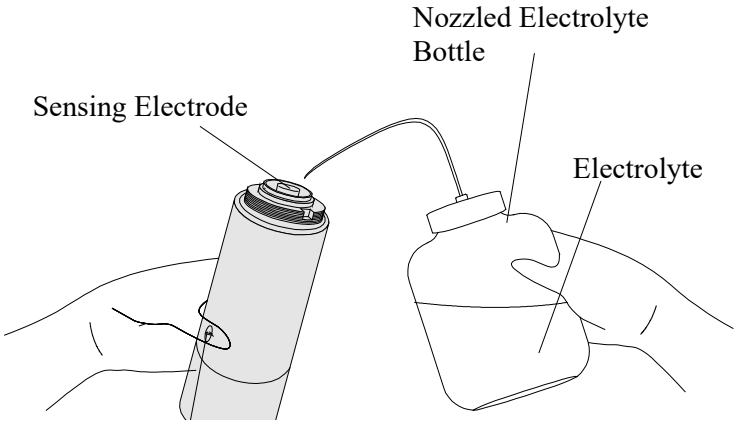

6. Place the sensor over the beaker as shown and pour the rinsed electrolyte into the beaker.

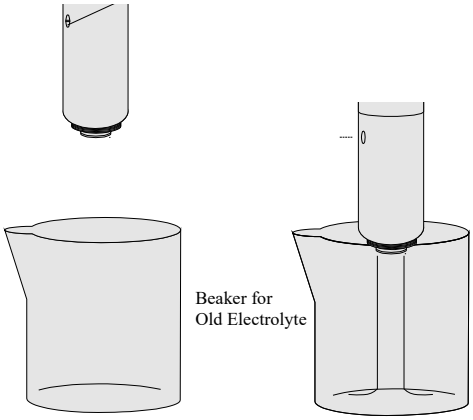

6. Refill the sensor cell with fresh electrolyte until it reaches ½ the MAX mark.

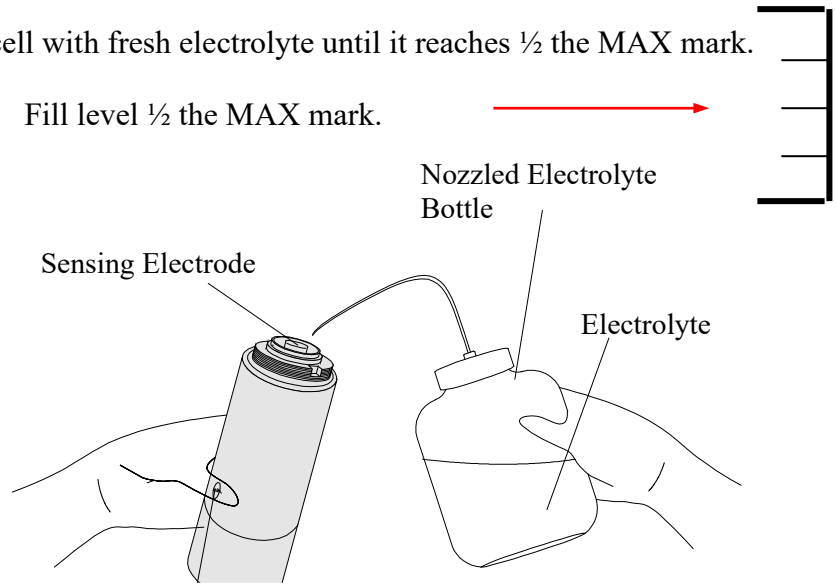

7. Wipe the sensing electrode and the surrounding area with a dry paper tissue. Make sure that the area is dry of electrolyte.

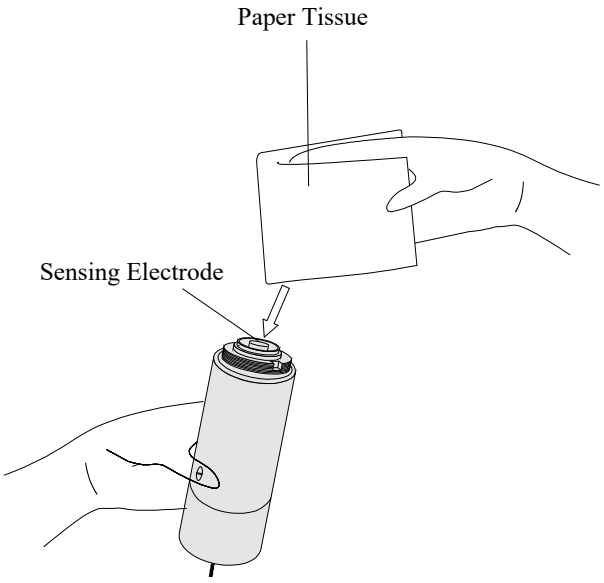

8. Place the O-ring and Silicon Sheet, (if provided) onto the sensor.

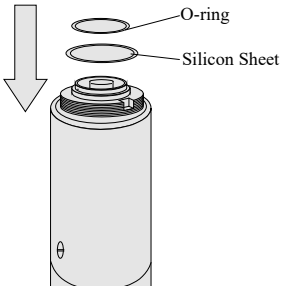

NOTE: If reusing the old O-ring and Silicon sheet, please dry them thoroughly before reinstalling.

8. Apply a generous drop of electrolyte on the sensing electrode.

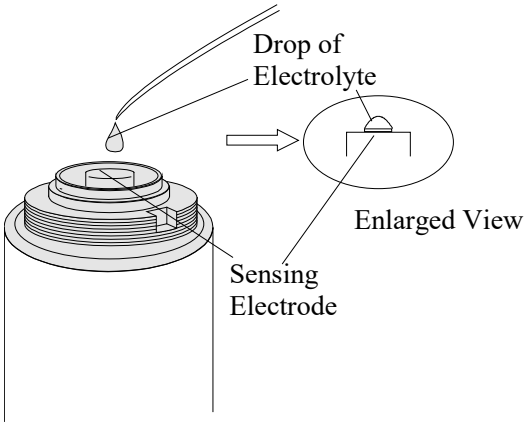

9. Place a new membrane on the sensor, with the bead of electrolyte between the electrode and the membrane.

Caution: Different sensors use membranes with either a **Green** or **Blue** tinted paper separating each membrane.

DO NOT USE THIS PAPER

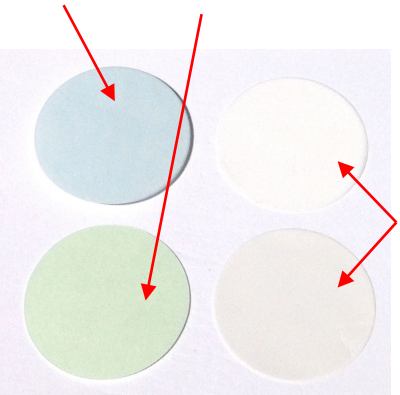

Membrane Color is White

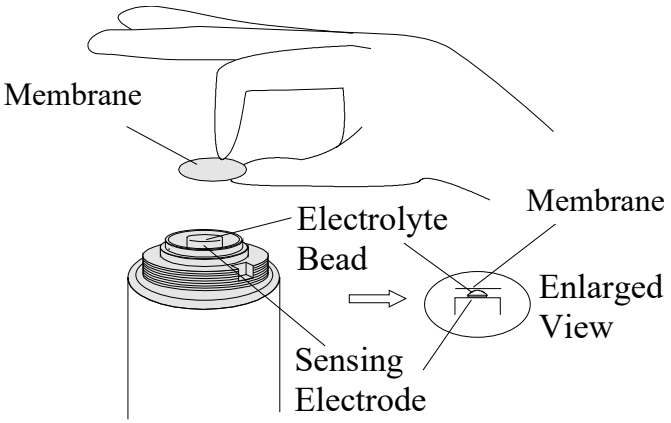

➡ **NOTE**: *Never touch the center of the membrane with bare fingers.*

10. Place the retainer ring over the membrane and then place the box nut over the retainer ring. Turn box nut clockwise until hand tight; continue tightening until the box nut can no longer be moved by hand. **CAUTION: Sensor cell response will be affected if box nut is too loose.**

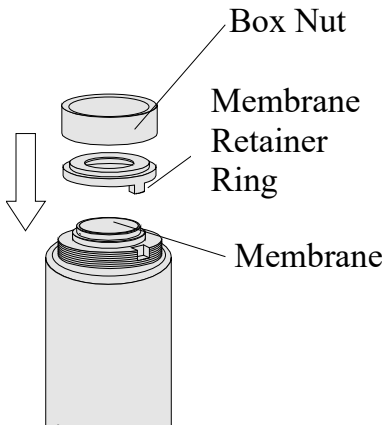

NOTE: Before reinstalling the Box nut and Membrane retainer ring, dry thoroughly with a paper towel

Example of proper membrane

Example of wrinkled membrane

12. Turn the cell to the proper monitoring direction, (Box Nut is facing down) and confirm that the level of electrolyte is at the MAX mark. It is OK if the level is slightly above or below the MAX mark.

NOTE: ***When storing the sensor cell never store the sensor cell horizontal with the Pressure Compensation Screw positioned down or store the sensor cell upside down. This can cause the electrolyte to leak from the sensor cell pressure compensation screw.***

13. Reinstall the sensor cell into the transmitter or duct.

6.2 Sensor Calibration Procedure

CAUTION: *Be sure to observe all safety guidelines when using span gases.*

NOTE: If the instrument is connected to a controller, set the controller to the standby mode to avoid accidental alarms. The Universal Gas Detector's internal alarm LED's and relays are always live. During a calibration test if levels exceed preset alarm thresholds you will also be verifying the internal alarms and any remote horns, strobes or fans that are connected.

6.2.1 Sensor Gas Calibration

The Universal Gas Detector requires periodic calibration with the appropriate calibration gas. A calibration test is a quantitative test of the Universal Gas Detector to a known gas concentration certified by a gas supplier.

PureAire recommends using specialty gas suppliers to obtain calibration gas standards. All span gases must be a blend of the target gas blended in air.

NOTE: *Span gas must be blended with air.* ***Do not blend with nitrogen***

The target gas concentration should be in the middle of the dynamic range of the detector, i.e., for a 0-10ppm range, use 5ppm gas.

In the absence of a known span gas, a qualitative bump gas test may be performed using commercially available products, i.e., Clorox for testing chlorine, bromine, and fluorine detectors or ammonia for testing NH_3 detectors. Consult PureAire for more information on test gases.

Calibration should be performed whenever:

- The membrane or electrolyte is replaced
- The entire sensor cell is replaced
- Six months have passed without membrane, electrolyte, or sensor replacement

NOTE: For higher accuracy, more frequent dynamic gas calibration is required.

6.2.2 Sensor Calibration Equipment

It is recommended to purchase calibration gas standards directly from your specialty gas provider. PureAire calibration equipment may be purchased directly from PureAire.

The following equipment is required to facilitate gas calibration:

Part Number	Description	Quantity
Provided by Gas Supplier	103-liter cylinder span gas, balance air	1
PureAire p/n 94013	Fixed Gas Regulator, Brass 0.5lt/min C-10 CGA	1
PureAire p/n 83505	Calibration Cap	1
PureAire p/n 94021	Tubing PTFE 1/8” x ¼” 2’ Length	1

6.2.3 Sensor Calibration Procedure

1. If the instrument is connected to a controller, set the controller to Standby mode to avoid accidental alarms.
2. Remove the smoked front transmitter cover.
3. Enter the password to permit access to the menus

   ...PassCode OK……
   0.0 ppm

4. Push the joystick to the Right once to go into each adjustment menu. You’ll see the first menu, Set 4-20mA loop.

   .Set 4-20mA loop…
   0.0 ppm

5. Push the joystick Up twice until the “Sensor Adjustment” menu is displayed.

   .Sensor Adjustment..
   0.0 ppm

6. Push the joystick Right to display the “Set Sensor Span” menu

   ..Set Sensor Span…
   0.0 ppm

7. Push the joystick down to display the “Set Sensor Zero” menu.

   ..Set Sensor Zero…
   0.0 ppm

6.2.4 Setting Zero

➡ **IMPORTANT:** *This procedure should be performed under normal monitoring conditions, without any of the target gas present. It is not recommended to use zero air.*

1. Check the instrument's gas concentration reading on the local display.
2. If the display does not read a steady "0," Use the following procedure to adjust the zero.
3. Push the joystick Right to enter the Zero adjust menu.

```
..Set Sensor Zero...
05
```

4. Push the joystick IN, (like a doorbell) and the zero will automatically set to 0 ppm.

```
..Set Sensor Zero...
0.0 PPM
```

5. Push the joystick UP to select the Sensor Span menu.

```
..Set Sensor Span...
0.0 PPM
```

6.2.5 Span Calibration

➡ **CAUTION:** *Be sure to observe all safety guidelines when generating and using calibration gases.*

➡ **NOTE:** *The target gas concentration should be in the middle of the dynamic range of the detector.*

1) Insert the sensor cell inside the Calibration cap (83505)

NOTE: DO NOT twist the sensor cell inside of the calibration cap as it will cause the sensor electrolyte to leak. Gently rock the sensor side-to-side to insert or remove the sensor cell to the calibration cap.

2) Connect the Span gas regulator (94013) to the Span gas cylinder.

3) Connect the Sample tubing assembly to the span gas regulator and to the calibration cap. Use the flexible tubing (94021) to connect to the span gas regulator. The calibration cap has a Push-to-connect connector. To insert the

tubing into the calibration cap, push the tubing firmly into the push-to-connect on the calibration cap. (Please insure the proper flow direction on the cal cap)

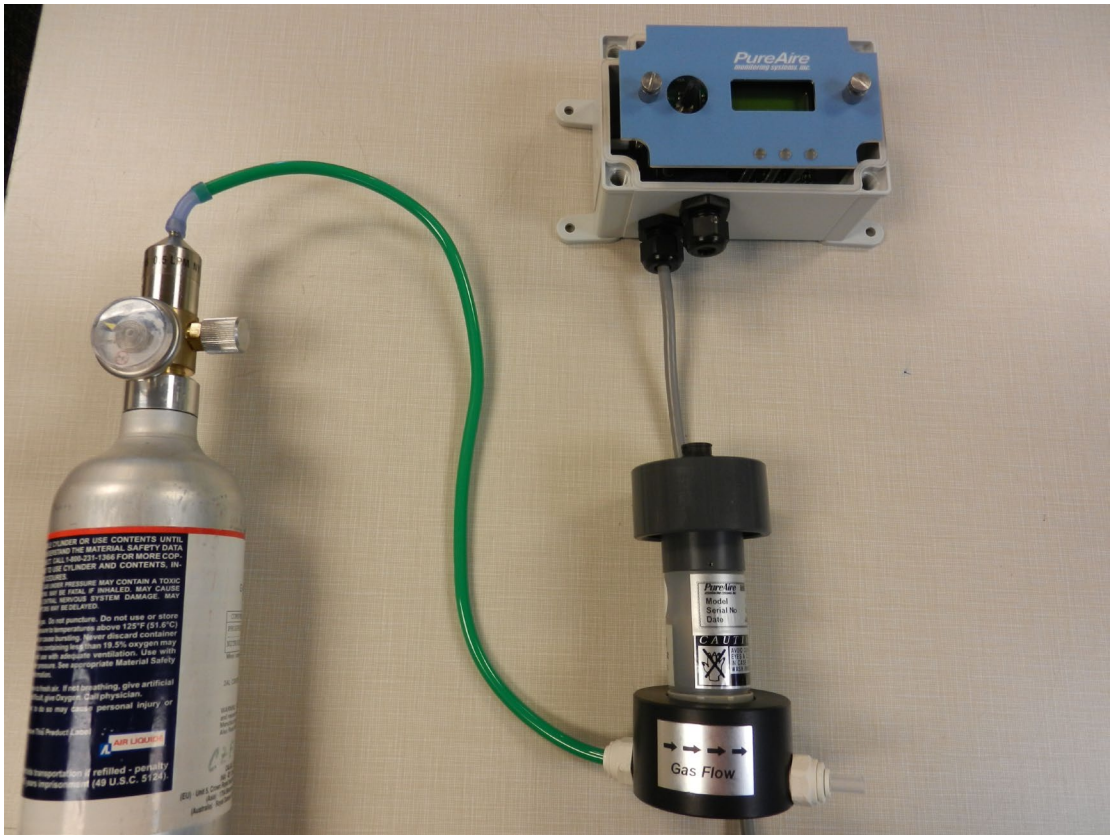

4) Push the joystick Right to enter the sensor span mode.

060 0.0 PPM

5) Open the valve on the Span gas cylinder
6) Expose the sensor cell to the span gas for 1 to 2 minutes until the gas reading stabilizes.
7) Adjust the detector's span to the span gas cylinder by pushing the joystick UP or DOWN. When holding the joystick in either position, the numbers will automatically move one count every second. Increasing or decreasing the values will increase or decrease the PPM reading on the detector.

078 5.0 PPM

8) When the reading is set to the span gas value, push the joystick left once to enter the setting and take you back to the "Set Sensor Span" menu.

Set Sensor Span…
0.0 PPM

9) Turn off the gas and remove the sensor cell from the calibration cap by gently rocking the sensor from the cap.

10) Allow the instrument to return to a zero reading. If the instrument has not returned to zero after 5 minutes, reset the zero. Refer to section 6.1.4

11) Push the joystick Left three times, (3) to return to the main menu.

..Gas Name…
0.0 PPM

7.0 Appendix

CONTACTOR/FAN CONNECTION

EXTERNAL RELAY FOR LOADS >2A

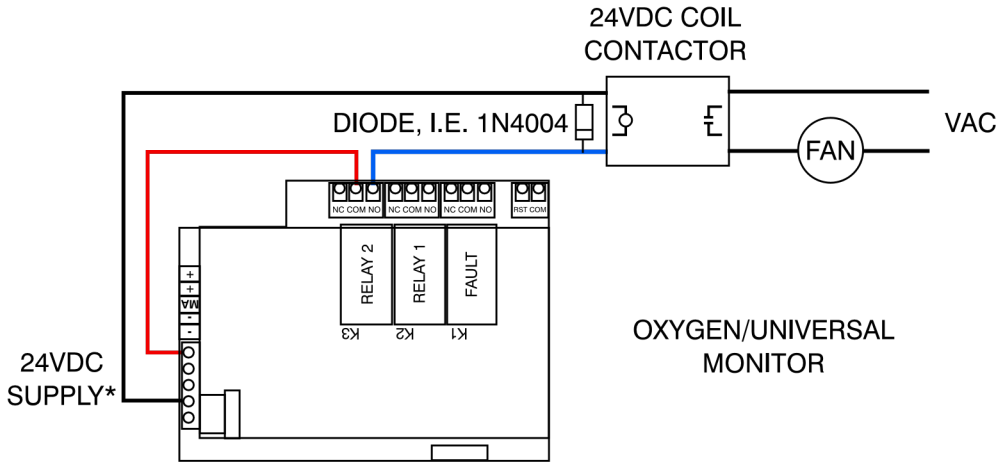

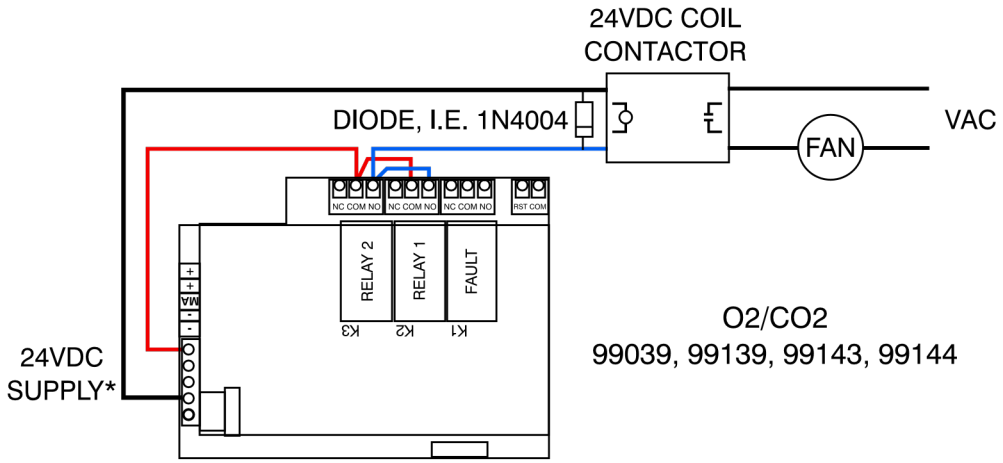

* OK TO USE EXTERNAL SUPPLY AS LONG AS VOLTAGE IS 24VDC/AC OR LESS

DIAGRAMS FOR 99016, 99029, 99129, 99028, 99145, 99097, 99141, 99035, 99128, 99020, 99045, UNLESS NOTED.

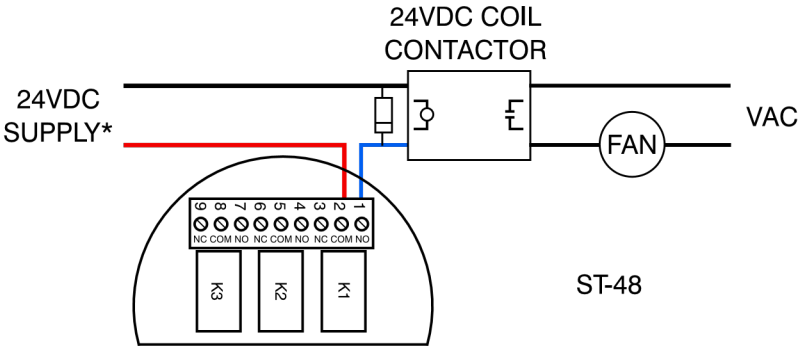

How to convert 4-20mA current output to a 1-5 VDC voltage output

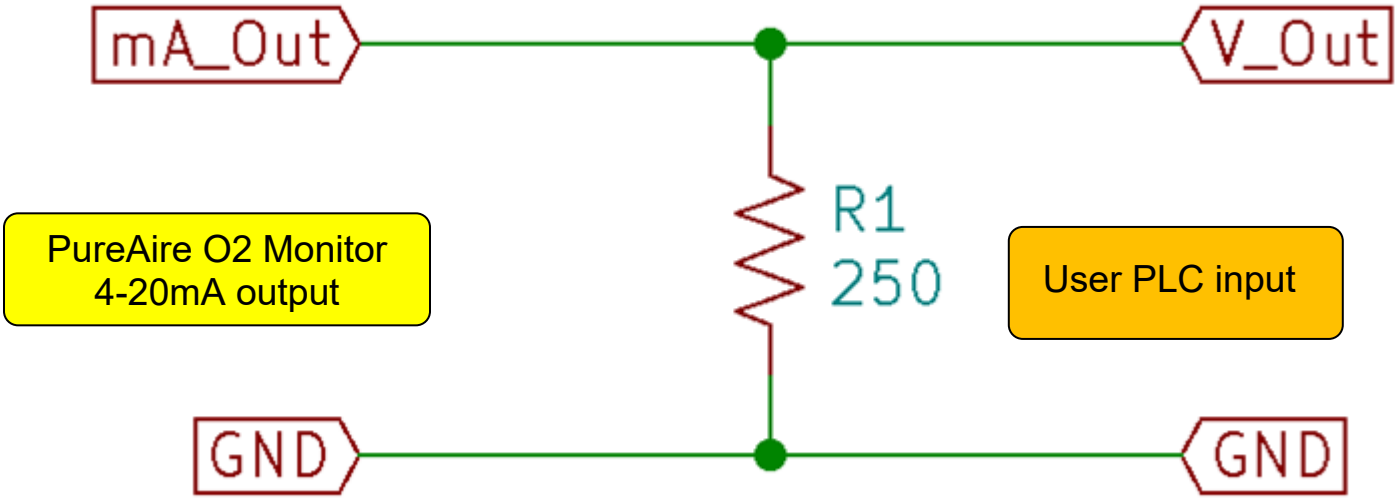

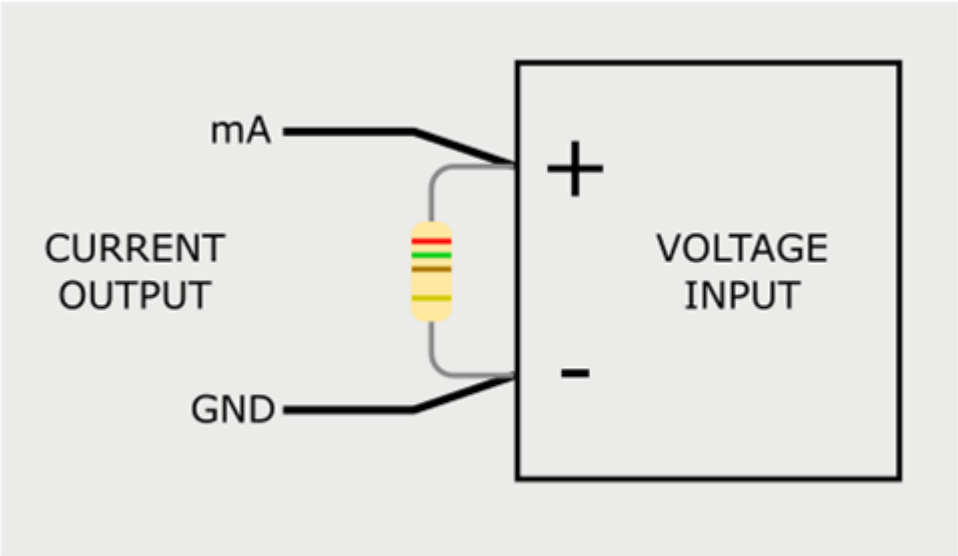

Attach 250-ohm resistor to the PLC or device input

NOTE: ENSURE CONTACTOR CHOSEN HAS CORRECT COIL VOLTAGE AND IS CURRENT-RATED FOR YOUR LOAD

Rev B, 091922

Sensor Cell Replacement Parts

Sensor Part No.	Gas	Electrolyte Part No.	Membrane Part No.	O-Ring Part No.	Mili-Seal Part No.
90193	Arsine	84200	82051	86001	86003
90263Q	Arsine	84200	82051	86001	86003
90266Q	Arsine	84200	82051	86001	86003
90062	Acetic	84150	82024	86001	86003
90063	Acetic	84150	82024	86001	86003
90244	Acetic	84150	82024	86001	86003
90194	BCL3	84156	82014	86001	86003
90221	BCL3	84156	82014	86001	86003
90171	BCI3	84156	82014	86001	86003
90106	Boron Trifluoride	84151	82016	86001	86003
90105	Boron Trifluoride	84151	82016	86001	86003
90107	Boron Trifluoride	84151	82016	86001	86003
90156	Diborane	84200	82051	86001	86003
90202	Diborane	84200	82051	86001	86003
90265Q	Diborane	84200	82051	86001	86003
90168	Bromine	84001	82001	86001	86003
90231	Dimethylamine	84405	82009	86001	86003
90228	Dimethylamine	84405	82009	86001	86003
90225	Dimethylamine	84405	82009	86001	86003
90045	Chlorine	84001	82001	86001	86003
90139	Chlorine	84001	82001	86001	86003
90205	Chlorine	84001	82001	86001	86003
90212	Chlorine	84001	82001	86001	86003
90144	Chlorine	84001	82001	86001	86003
90044	Chlorine	84001	82001	86001	86003
90164	Chlorine	84001	82001	86001	86003
90046	Chlorine	84001	82001	86001	86003
90148	Chlorine Dioxide	84003	82003	86001	86003
90070	Chlorine Dioxide	84003	82003	86001	86003
90122	Chlorine Dioxide	84003	82003	86001	86003
90069	Chlorine Dioxide	84003	82003	86001	86003
90241	Dichlorosilane	84150	82024	86001	86003
90242	Dichlorosilane	84150	82024	86001	86003
90243	Dichlorosilane	84150	82024	86001	86003
90101	Fluorine	84003	82003	86001	86003
90058	Fluorine	84003	82003	86001	86003

Sensor Part No.	Gas	Electrolyte Part No.	Membrane Part No.	O-Ring Part No.	Mili-Seal Part No.
90100	Fluorine	84003	82003	86001	86003
90249	Fluorine	84003	82003	86001	86003
90057	Fluorine	84003	82003	86001	86003
90102	Fluorine	84003	82003	86001	86003
90059	Fluorine	84003	82003	86001	86003
90237	Fluorine	84003	82003	86001	86003
90134	Formic Acid	84153	82004	86001	86003
90150	Formic Acid	84153	82004	86001	86003
90133	Formic Acid	84153	82004	86001	86003
90135	Formic Acid	84153	82004	86001	86003
90238	HCL	84151	82016	86001	86003
90097	HCL	84151	82016	86001	86003
90092	HCL	84151	82016	86001	86003
90093	HCL	84151	82016	86001	86003
90098	HCL	84151	82016	86001	86003
90094	HCL	84151	82016	86001	86003
90096	HCL	84151	82016	86001	86003
90053	HF	84150	82024	86001	86003
90068	HF	84150	82024	86001	86003
90099	HF	84150	82024	86001	86003
90074	HF	84150	82024	86001	86003
90072	H2	84300	84450	86000	86003
90131	H2	84300	84450	86000	86003
90073	H2	84300	84450	86000	86003
90130	H2	84300	84450	86000	86003
90071	H2	84300	84450	86000	86003
90132	H2	84300	84450	86000	86003
90176	HBr	84150	82024	86001	86003
90162	HBr	84150	82024	86001	86003
90222	HBr	84150	82024	86001	86003
90103	HCN	84051	82012	86001	86003
90049	HCN	84051	82012	86001	86003
90104	HCN	84051	82012	86001	86003
90087	H2O2	84150	82024	86001	86003
90189	H2O2	84150	82024	86001	86003
90089	H2O2	84150	82024	86001	86003
90080	H2S	84050	82011	86001	86003
90081	H2S	84050	82011	86001	86003
90082	H2S	84050	82011	86001	86003
90214	H2Se	84200	82051	86001	86003
90217	H2Se	84200	82051	86001	86003
90052	HNO3	84150	82024	86001	86003

Sensor Part No.	Gas	Electrolyte Part No.	Membrane Part No.	O-Ring Part No.	Mili-Seal Part No.
90061	HNO3	84150	82024	86001	86003
90218	I2	84200	82000	86001	86003
90219	I2	84200	82000	86001	86003
90220	I2	84200	82000	86001	86003
90154	MMH	84202	82010	86001	86003
90047	NH3	84405	82009	86001	86003
90118	NH3	84404	82009	86001	86003
90155	NH3	84404	82009	86001	86003
90157	NH3	84404	82009	86001	86003
90158	NH3	84404	82009	86001	86003
90065	NH3	84404	82009	86001	86003
90066	NH3	84405	82009	86001	86003
90067	NH3	84405	82009	86001	86003
90116	NH3	84404	82009	86001	86003
90117	NH3	84404	82009	86001	86003
90048	N2H4	84202	82010	86001	86003
90110	N2H4	84202	82010	86001	86003
90111	N2H4	84202	82010	86001	86003
90112	N2H4	84202	82010	86001	86003
90083	NO2	84302	82005	86000	86003
90084	NO2	84302	82005	86000	86003
90085	NO2	84302	82005	86000	86003
90153	NO2	84302	82005	86000	86003
90154	MMH	84202	82010	86001	86003
90121	O3	84406	82025	86001	86003
90143	O3	84406	82025	86001	86003
90051	O3	84406	82025	86001	86003
90146	POCL3	84151	82016	86001	86003
90245	POCL3	84151	82016	86001	86003
90051	PH3	84406	82025	86001	86003
90078	PH3	84200	82051	86001	86003
90183	PH3	84200	82051	86001	86003
90264Q	PH3	84200	82051	86001	86003
90223	Si2H6	84200	82051	86001	86003
90226	Si2H6	84200	82051	86001	86003
90229	Si2H6	84200	82051	86001	86003
90224	SiHCl3	84156	82014	86001	86003
90227	SiHCl3	84156	82014	86001	86003
90230	SiHCl3	84156	82014	86001	86003
90055	SO2	84150	82024	86001	86003
90056	SO2	84150	82024	86001	86003
90213	SO2	84150	82024	86001	86003
90192	SO2	84150	82024	86001	86003

Sensor Part No.	**Gas**	**Electrolyte Part No.**	**Membrane Part No.**	**O-Ring Part No.**	**Mili-Seal Part No.**
90127	SiH4	84200	82051	86001	86003
90128	SiH4	84200	82051	86001	86003
90129	SiH4	84200	82051	86001	86003
90246	C6H15N	84404	82009	86001	86003

Please note that the Part Number for the Sensor Cell is located on the Sensor Cell itself. Please contact PureAire if you are unable to locate the part number or if it has been removed.

***** Please contact PureAire for any questions regarding part number, pricing, and availability.***