INSTRUMENTS

T3A
Operator's Manual

Part Number: 71-0533

Revision: P16

Released: 1/29/26

RKI Instruments, Inc.
www.rkiinstruments.com

WARNING

Read and understand this instruction manual before operating detector. Improper use of the detector could result in bodily harm or death.

Periodic calibration and maintenance of the detector is essential for proper operation and correct readings. Please calibrate and maintain this detector regularly! Frequency of calibration depends upon the type of use you have and the sensor types. For most applications, typical calibration frequencies are between 3 and 6 months but can be more often or less often based on your usage.

Product Warranty

RKI Instruments, Inc. warrants gas alarm equipment sold by us to be free from defects in materials, workmanship, and performance for a period of one year from date of shipment from RKI Instruments, Inc. Any parts found defective within that period will be repaired or replaced, at our option, free of charge. This warranty does not apply to those items which by their nature are subject to deterioration or consumption in normal service, and which must be cleaned, repaired, or replaced on a routine basis. Examples of such items are:

- Absorbent cartridges
- Fuses
- Pump diaphragms and valves
- Batteries
- Filter elements

Warranty is voided by abuse including mechanical damage, alteration, rough handling, or repair procedures not in accordance with the operator's manual. This warranty indicates the full extent of our liability, and we are not responsible for removal or replacement costs, local repair costs, transportation costs, or contingent expenses incurred without our prior approval.

> THIS WARRANTY IS EXPRESSLY IN LIEU OF ANY AND ALL OTHER WARRANTIES AND REPRESENTATIONS, EXPRESSED OR IMPLIED, AND ALL OTHER OBLIGATIONS OR LIABILITIES ON THE PART OF RKI INSTRUMENTS, INC. INCLUDING BUT NOT LIMITED TO, THE WARRANTY OF MERCHANTABILITY OR FITNESS FOR A PARTICULAR PURPOSE. IN NO EVENT SHALL RKI INSTRUMENTS, INC. BE LIABLE FOR INDIRECT, INCIDENTAL, OR CONSEQUENTIAL LOSS OR DAMAGE OF ANY KIND CONNECTED WITH THE USE OF ITS PRODUCTS OR FAILURE OF ITS PRODUCTS TO FUNCTION OR OPERATE PROPERLY.

This warranty covers instruments and parts sold to users by authorized distributors, dealers, and representatives as appointed by RKI Instruments, Inc.

We do not assume indemnification for any accident or damage caused by the operation of this gas monitor, and our warranty is limited to the replacement of parts or our complete goods.

Caution Statements

WARNING: ***WARNING - EXPLOSION HAZARD - SUBSTITUTION OF COMPONENTS MAY IMPAIR SUITABILITY FOR CLASS I, DIVISION 1, or equivalent as stated in user manual.***

AVERTISSEMENT - RISQUE D'EXPLOSION-LA SUBSTITUTION DE COMPOSANTS PEUT RENDURE CE MATERIEL INACCEPTABLE POUR LES EMPLACEMENTS DE CLASSE I, DIVISION I.

CAUTION: *For safety reasons, this equipment must be operated and serviced by qualified personnel only. Read and understand the instruction manual completely before operating or servicing.*

ATTENTION: *POUR DES RAISONS DE SECURITE, CET ÉQUIPEMENT DOIT ETRE UTILISE ENTRETENU ET REPARER UNIQUEMENT PAR UN PERSONNEL QUALIFIE. ETUDIER LE MANUEL D' INSTRUCTIONS EN ENTIER AVANT D' UTILISER, D' ENTERETENIR OU DE RÉPARER L' ÉQUIPEMENT.*

CAUTION: *THIS AREA MUST BE FREE OF FLAMMABLE GASES DURING CALIBRATION.*

ATTENTION: *ATTENTION: CETTE ZONE DOIT ETRE EXEMPTE DE GAZ INFLAMMABLES PENDANT L'ETALONNAGE.*

CAUTION: *TO PREVENT IGNITION OF EXPLOSIVE ATMOSPHERES, remove from explosive atmosphere BEFORE SERVICING.*

WARNING: ***A conduit seal must be used within 18 inches of the enclosure wall to comply with the hazardous location rating of this product.***

Danger Statements

DANGER: The RKI Instruments Inc. T3A is an ambient air Hazardous gas sensor assembly and only monitors in the immediate vicinity of the sensor housing. A site survey is required in order to determine the best placement and quantity of sensor assemblies. Improper installation can lead to an undetectable gas leak which could result in personal injury or loss of life.

Table of Contents

Overview 7

Specifications 8

External Description 11

Internal Description 12

Exploded Drawing 13

Remote-Mounted Kit 14

Installation 15

Mounting the T3A. 15
Remote-Mounted Kit Wiring 18
Wiring Power and 4-20 mA Output 19
Connecting RS-485 Modbus. 21
Connecting Relays/Alarms 23
Connecting the Fault Terminal 25
Closing the Enclosure 26

Start Up 27

Operation 29

Normal Operating Mode 29
Manual Reset for Activated Latching Alarms. 30
Magnetic Buttons 29
Powering the Device 30
Faults. 31
Accessing Menus 31

Product Settings and Configuration 32

Entering the Product Settings and Configuration Menu 32
Alarm Test. 33
System Information. 34
Zero/Calibration Timer Information 34
Unit Information 35

Latching and Auto Resetting Relay Settings 35
Relay Fail-Safe Setting 36
Fault Terminal Fail-Safe Setting 38
Calibration Method 39
Modbus Address Setting 39
Modbus Baud Setting 40
4-20 mA Offset Settings 41
Display Screen Contrast Setting 42
Return to Factory Default Settings 43
Reset Zero & Calibration Values 45

Operation Settings and Calibration 47

Zeroing the Sensor (20.9% for O_2) 47
Calibrating the Sensor (Manual Cal) 49
Calibrating the Sensor (Auto Cal) 51
Sensor Alarm Settings 55

Maintenance 57

Troubleshooting 57
Replacing the Desiccant 58
Replacing Catalytic Type Sensors 58
Replacing Non-Catalytic Type Sensors 60
Replacing the Fuse 63

Parts List 65

Appendix A: 4-20 mA Signal 69

Appendix B: Modbus Communications 72

Appendix C: Modbus Register Map 74

Overview

The RKI Instruments, Inc. T3A explosion-proof ambient air hazardous gas detector is designed to detect a wide range of toxic gases in potentially hazardous environments. This product is QPS certified as Class I, Division 1, Groups B, C, and D and rated for Zone 1, Group IIB. The T3A features non-intrusive magnetic switches that allow for complete system configuration, regular calibration, and product maintenance to be performed in the field, without opening the enclosure and breaking the seal of the enclosure, thereby compromising the explosion-proof rating of the device. Non-intrusive interface with the T3A is made possible by use of the magnetic tool included in the purchase of the device.

In this manual, the instructions reference the use of push-buttons, located on the front panel of the device. In certain environments, the activation of the non-intrusive magnetic switches, through the use of the magnetic tool, will replace the directive of the button-press actions. To apply the magnetic tool, hold the tool to the side of the device enclosure adjacent to the push-button that you wish to activate. When the magnetic switch is toggled, an on-screen indicator will appear on the display screen, signifying that a connection was made.

The T3A display screen will always show the present concentration of gas being detected by the sensor assembly.

This document is an operation manual containing diagrams and step-by-step instructions for the proper and safe installation, start-up, configuration, normal operation, and product maintenance of the T3A.

NOTE: This document should be read in its entirety before the initial operation of the product.

Specifications

Table 1 lists specifications for the T3A.

Table 1: Specifications

Target Gas	Detection Range	Increments	Haz. Loc.
Ammonia (NH_3)	0-100 ppm	1 ppm	Cl. 1 Div. 2
	0-200 ppm		
	0-300 ppm		
	0-500 ppm		
	0-1,000 ppm		
Arsine (AsH_3)	0-1.00 ppm	0.01 ppm	
Carbon Dioxide (CO_2)	0-5,000 ppm	1 ppm	Cl. 1 Div. 1
	0-5.0% volume	0.1% volume	
Carbon Monoxide (CO)	0-500 ppm	1 ppm	
	0-1,000 ppm		
Chlorine (Cl_2)	0-10.0 ppm	0.1 ppm	Cl. 1 Div. 2
Chlorine Dioxide (ClO_2)	0-1.00 ppm	0.01 ppm	
	0-5.00 ppm		
Combustible Gas	0-100% LEL	1% LEL	Cl. 1 Div. 1
	0-100% volume	1% volume	
Ethylene Oxide (EtO)	0-10.00 ppm	0.01 ppm	Cl. 1 Div. 2
Formaldehyde (CH_2O)	0-10.00 ppm		
Hydrogen (H_2)	0-100% LEL	1% LEL	Cl. 1 Div. 1
Hydrogen Chloride (HCl)	0-20 ppm	1 ppm	Cl. 1 Div. 2
	0-30 ppm		
	0-100 ppm		
Hydrogen Cyanide (HCN)	0-50 ppm		Cl. 1 Div. 1
Hydrogen Fluoride (HF)	0-10.0 ppm	0.1 ppm	Cl. 1 Div. 2
Hydrogen Sulfide (H_2S)	0-10.0 ppm		Cl. 1 Div. 1
	0-25 ppm	1 ppm	
	0-50 ppm		
	0-100 ppm		
	0-500 ppm		
	0-2,000 ppm		
Nitric Oxide (NO)	0-250 ppm		Cl. 1 Div. 2
Nitrogen Dioxide (NO_2)	0-20 ppm		

Table 1: Specifications

Target Gas	Detection Range	Increments	Haz. Loc.
Oxygen (O_2)	0-25.0% volume	0.1% volume	Cl. 1 Div. 1
Ozone (O_3)	0-5.0 ppm	0.1 ppm	Cl. 1 Div. 2
	0-100 ppm	1 ppm	
Phosphine (PH_3)	0-5.0 ppm	0.1 ppm	Cl. 1 Div. 1
Sulfur Dioxide (SO_2)	0-20 ppm	1 ppm	

Sampling Method	Diffusion
Zero Suppression	• O_2 channels: No zero suppression • All other channels: 1% of full scale
Enclosure Ratings	• Explosion/Flame-Proof • IP-51
Junction Box Hazardous Location Certification	Class I, Division 1, Groups B, C, D Ex db IIB Gb Class I, Zone 1, AEx db IIB Gb Tamb -40°C to +60°C
Sensor Housing Hazardous Location Certification	Class I, Division 1 (or Division 2), Groups B, C, D Ex db IIB Gb Tamb -40°C to +60°C ***NOTE:*** *Certification only applies to some gases. Toxic gases not certified for Div. 1 locations are suitable for Div. 2 applications but have no third party approval.*
Operating Voltage	12 - 35 VDC
Current Draw	250 mA max
Operating Temperature Range	-40°C to +54°C (-40°F to +129°F)
Humidity Range	0 - 98% relative humidity, non-condensing
Signal Output	• 4 to 20 mA (3-wire) • RS-485 Modbus RTU
Relay Contact Ratings	• 3A at 24 VDC, 115 VAC, and 250 VAC • each relay terminal protected by a 4A fuse
Enclosure Material	Aluminum
Sensor Housing Material	303 Stainless steel
Max Cable Length for Remote-Mounted Kit	• Electrochemical (EC): 250 feet • Infrared (IR): 40 feet • Catalytic: 15 feet
Dimensions	5.5” D x 6” W x 7” H
Weight	6 lbs.

Standard Accessories	• Rain guard (shipped with O_2, CO, H_2S, CO_2, and LEL detectors only) • Magnet

WARNING: ***When using the T3A, you must follow the instructions and warnings in this manual to assure proper and safe operation of the T3A and to minimize the risk of personal injury. Be sure to maintain and periodically calibrate the T3A as described in this manual.***

External Description

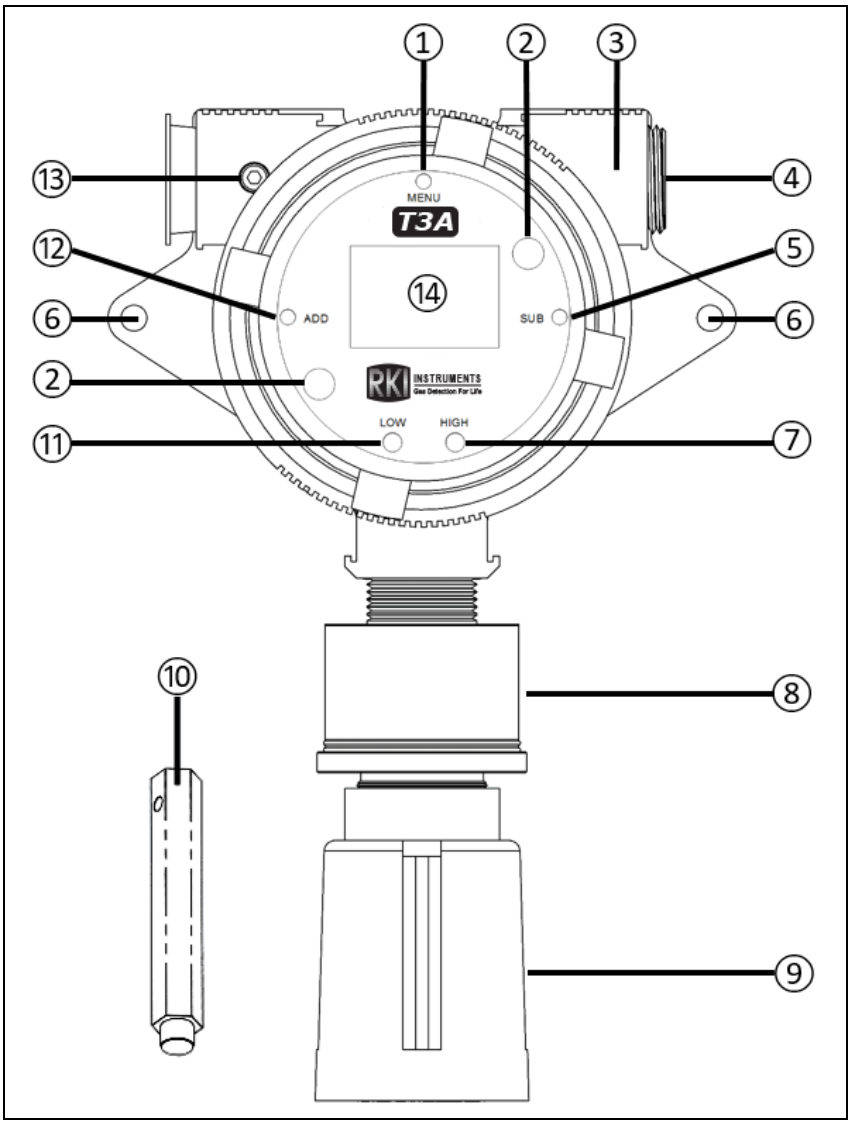

Figure 1: T3A External Component Location

1	MENU button
2	Front panel thumbscrew
3	Enclosure
4	explosion-proof plug
5	SUB button
6	Mounting hole
7	Alarm 2 LED

8	Sensor housing assembly
9	Rain guard*
10	Magnetic tool
11	Alarm 1 LED
12	ADD button
13	Enclosure lid locking screw
14	Display screen

* *Shipped with O_2, CO, H_2S, CO_2, and LEL detectors only*

NOTE: *The T3A's conduit hubs are 3/4 NPT.*

Internal Description

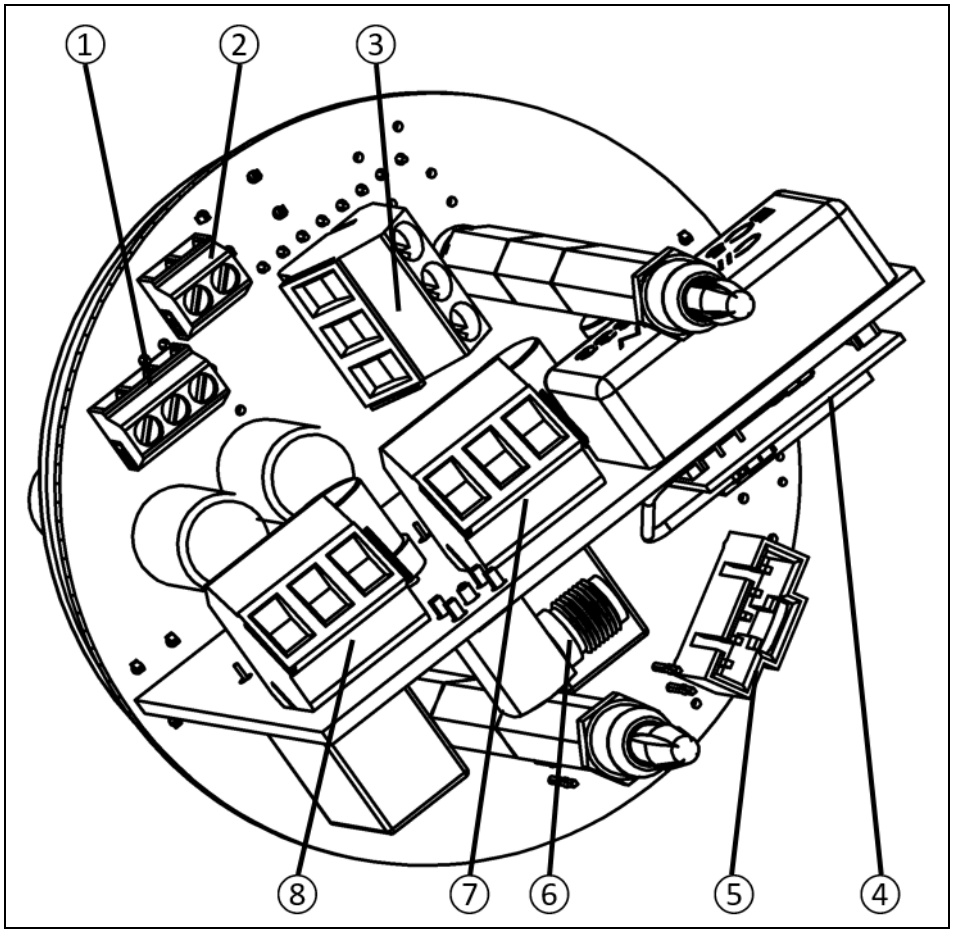

Figure 2: Internal Component Location

1	RS-485 Modbus terminal block
2	Fault terminal block
3	Power input/4-20 mA output terminal block
4	Not installed in T3A

5	Sensor housing socket
6	Not installed in T3A
7	Relay 1 terminal block (if relays installed)
8	Relay 2 terminal block (if relays installed)

Exploded Drawing

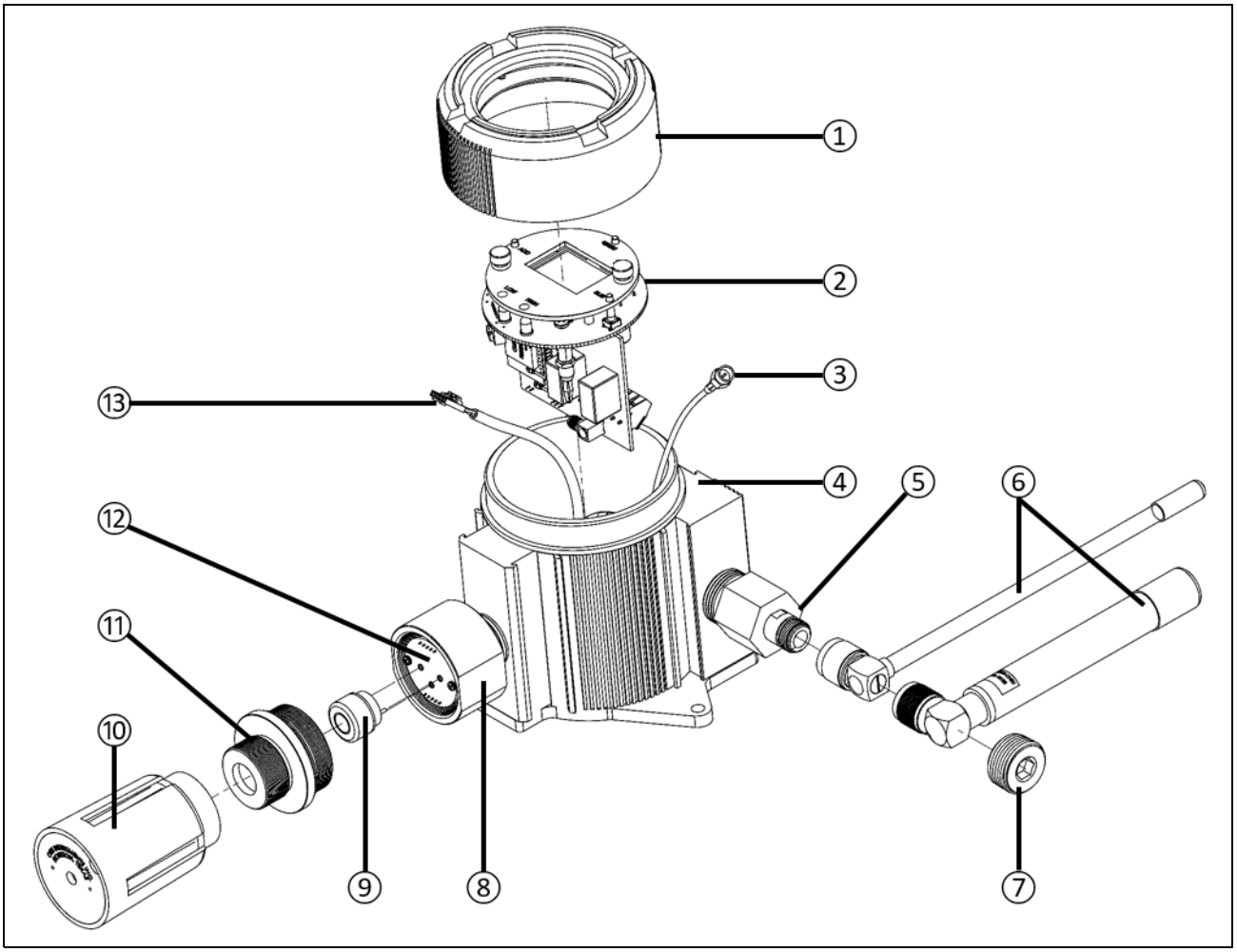

Figure 3: Exploded Diagram

1	Enclosure lid
2	Internal system
3	Not installed in T3A
4	Enclosure body
5	Not installed in T3A
6	Not installed in T3A
7	Explosion-proof plug

8	Sensor housing base
9	Sensor element
10	Rain guard*
11	Sensor housing cap (with flame arrestor for Class 1 Div. 1 assemblies; without flame arrestor for Class 1 Div. 2 assemblies)
12	Analog sensor board
13	Sensor housing plug

* *Shipped with O_2, CO, H_2S, CO_2, and LEL detectors only*

Remote-Mounted Kit

A remote-mounted sensor kit can be ordered if the sensor needs to be somewhere that is not conveniently accessible for viewing the display screen.

The kit includes a second junction box on a cable with a cable bushing/cable gland. The cable can be ordered in 1-foot increments with maximum cable lengths listed below.

Sensor Type	Max Cable Length
Electrochemical (EC)	250 feet
Infrared (IR)	40 feet
Catalytic	15 feet

The cable and cable bushing/cable gland are not explosion-proof. If the assembly is installed in a classified location, the cable bushing must be removed and replaced with explosion-proof conduit. You must meet local electrical codes and use appropriate construction technique to maintain the explosion-proof classification of the assembly.

Installation

This section describes procedures to mount the T3A in the monitoring environment and wire the T3A.

Mounting the T3A

1. Consider the following when you select the mounting site.
   - Select a site where the T3A is not likely to be bumped or disturbed. Make sure there is sufficient room to perform start-up, maintenance, and calibration procedures.
   - Select a site that is representative of the monitoring environment and where the target gas is likely to accumulate or where it is most likely to leak. The T3A should not be installed near an entrance, air intake, or exhaust point.
   - The sensor must point down.
   - Avoid installing the T3A in a location where airborne particles could cover or coat the sensor.

NOTE: These guidelines are **ONLY** intended as a general directive for the placement of the T3A. This information should **NOT** serve as a complete list when considering all potential parameters for the proper location of the unit. It is **STRONGLY** advised that a third party Certified Industrial Hygienist, or other Certified Safety Professional, conduct a site survey and annotate the location and quantity of detection devices that should be installed for **EVERY** installation of **EVERY** site.

2. Select a mounting location and installation hardware. Mounting to a concrete or steel structure is recommended to minimize vibration and moisture. Use a maximum 1/4”-20 bolt or 1/4” diameter screw, flat washers, Grade 5 material, and corrosion protection like paint, galvanization, or zinc plating.

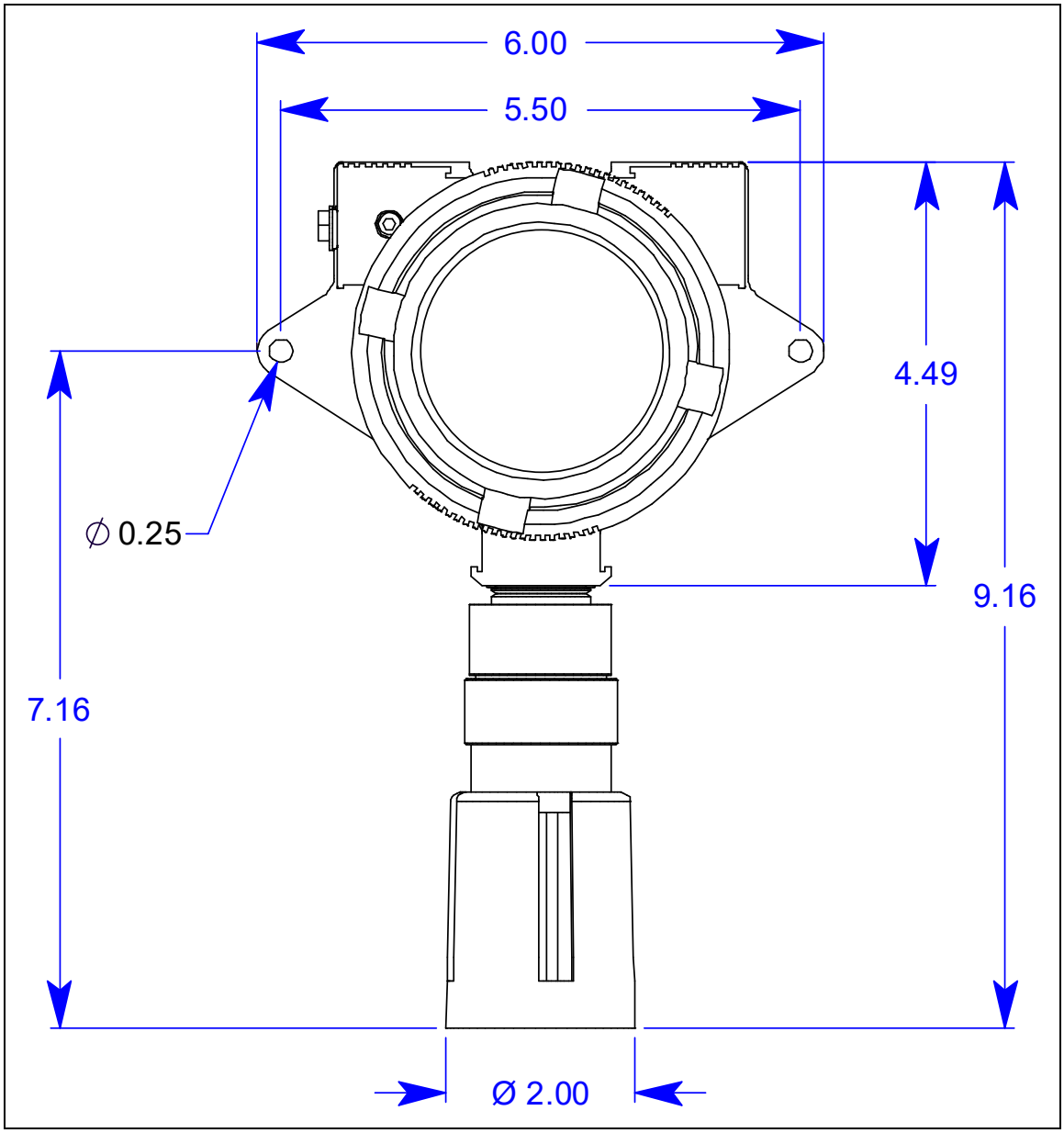

Figure 4: T3A Dimensions

3. For a remote-mounted kit, install the detector junction box at the monitoring environment using techniques appropriate for the mounting area's classification and for the local electrical code. The cable and cable bushing/cable gland sent with the assembly are not explosion-proof.

WARNING: If installed in a classified area, use appropriate construction technique to maintain the explosion-proof classification of the assembly.

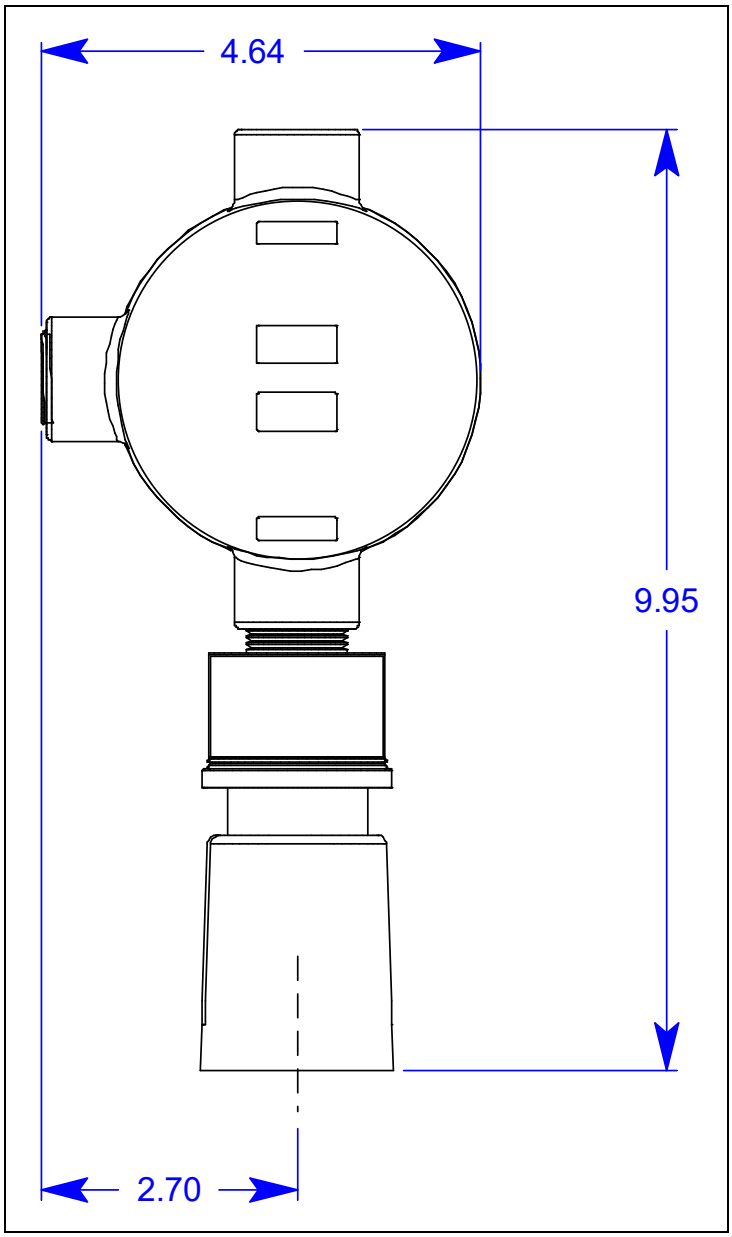

Figure 5: Remote-Mounted Kit's Detector Junction Box Dimensions

Remote-Mounted Kit Wiring

The remote-mounted kit generally comes prewired but if it becomes disconnected, follow these steps to reconnect it.

CAUTION: *The internal components can be static sensitive. Use caution when opening the enclosure and handling internal components.*

CAUTION: *Make sure the power source is off before beginning the wiring procedure.*

CAUTION: ***DO NOT*** *use any metal objects or tools to remove the terminal board from the internal system.*

1. Unscrew each enclosure lid and set it aside.
2. At the amplifier junction box, grab the thumbscrews and gently lift the internal system out of the enclosure. It can rest on the edge of the enclosure.
3. One end of the cable has a connector and the other has ferruled wires.
4. Feed the connector end of the cable through a 3/4 NPT conduit hub at the amplifier junction box.

   WARNING: ***If installed in a classified area, use appropriate construction technique to maintain the explosion-proof classification of the assembly.***

5. Plug the connector into the sensor connector socket at the amplifier junction box.
6. Feed the ferruled-wire end of the cable through a 3/4 NPT conduit hub at the detector junction box.

   WARNING: ***If installed in a classified area, use appropriate construction technique to maintain the explosion-proof classification of the assembly.***

7. Connect the ferruled wires to the color-coded terminals in the detector junction box.
8. Secure the detector junction box's enclosure lid back onto the enclosure.

Wiring Power and 4-20 mA Output

The T3A has several basic wiring configurations, dependent upon the desired usage and functionality intended by the end-user. All T3A units require +12 to +35 Volts of wired DC power to operate. Data communication from the device, through either the 4-20 output or the RS-485 Modbus connection, to an external location are optional.

CAUTION: *The internal components can be static sensitive. Use caution when opening the enclosure and handling internal components.*

CAUTION: *Make sure the power source is off before beginning the wiring procedure.*

CAUTION: ***DO NOT*** *use any metal objects or tools to remove the terminal board from the internal system.*

Table 2: T3A Terminal Block Wire Gauges

Terminal Block	Wire Gauge
Power terminal	Min: 26 AWG Max: 14 AWG
Relay 1 & 2 terminal	
Modbus terminal	Min: 26 AWG Max: 16 AWG
Fault terminal	

1. Unscrew the enclosure lid and set it aside.
2. Grab the thumbscrews and gently lift the internal system out of the enclosure. It can rest on the edge of the enclosure.

NOTE: Disconnecting the sensor connector plug from the sensor housing will allow for the complete removal of the internal system from the device enclosure. Disconnecting the internal system may provide ease in accessing the control board terminals for wiring. Reconnect the sensor connector plug before reinstalling the internal system.

WARNING: ***Use appropriate construction technique to maintain the explosion-proof classification of the assembly.***

3. Feed the power and 4-20 mA signal wires through the T3A's 3/4 NPT power hub and into the enclosure.

NOTE: Wiring power to the device is the **ONLY** requirement for the T3A to operate. With power, the unit will function normally, indicating the presence of toxic gas at the sensor and providing the gas level reading on the display screen. To utilize the added functionality of the device, additional wiring is necessary. If a controller is not used, the T3A can be powered from any +12 to +35 VDC power supply that is capable of supplying at least 250 mA.

4. Locate the power terminal block on the control board and complete the following (see Figure 6).
   - Connect the power (GRAY) wire to the **VDC +** terminal.
   - Connect the ground (BLACK) wire to the **VDC -** terminal.
   - Connect the signal (GREEN) wire to the **4-20 mA (S)** terminal.

CAUTION: *If shielded cable is used, leave the cable shield's drain wire disconnected and insulated at the T3A. You will connect the opposite end of the cable's drain wire to the controller's chassis (earth) ground.*

5. Route the cable or wires leading from the T3A through one of the conduit hubs at the controller housing.

CAUTION: *Do not route power and T3A wiring through the same controller conduit hub. The power cable may disrupt the transmission of the T3A signal to the controller.*

6. Connect the wires to the applicable detector terminal strip at the controller as shown in Figure 6.

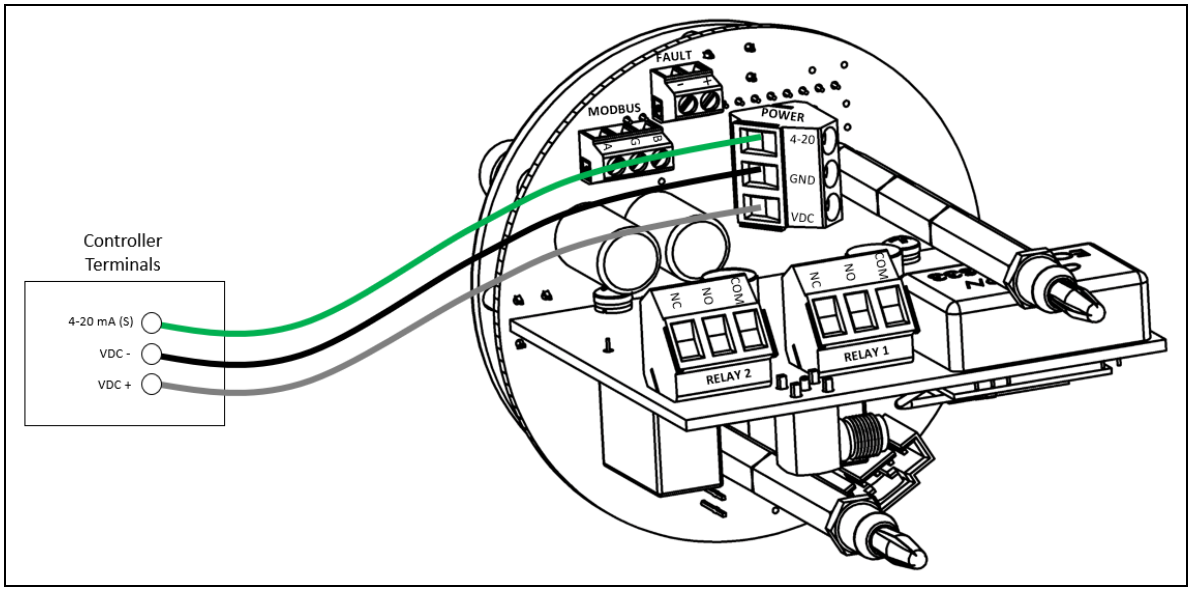

Figure 6: Wiring Power and Signal Wiring

7. If shielded cable is used, connect the cable's drain wire to an available chassis (earth) ground at the controller. RKI controllers typically have a ground stud that can be used to ground the cable's drain wire.

Connecting RS-485 Modbus

The T3A supports Modbus RTU over a RS-485 link.

Table 3: T3A Terminal Block Wire Gauges

Terminal Block	Wire Gauge
Power terminal	Min: 26 AWG Max: 14 AWG
Relay 1 & 2 terminal	
Modbus terminal	Min: 26 AWG Max: 16 AWG
Fault terminal	

1. If necessary, unscrew the enclosure lid and pull the internal system out by the thumbscrews.

   CAUTION: *Be sure power to the T3A is off before pulling out the internal system.*

2. Feed the RS-485 cable through the 3/4 NPT power hub and into the enclosure.

   WARNING: ***Use appropriate construction technique to maintain the explosion-proof classification of the assembly.***

3. Connect the RS-485 B (BROWN) wire to the **B** terminal.
4. Connect the ground (BLACK) wire to the **GND** terminal.
5. Connect the RS-485 A (YELLOW) wire to the **A** terminal.

6. Feed the RS-485 cable through the power hub and into the controller and wire them to the correct terminals as shown below.

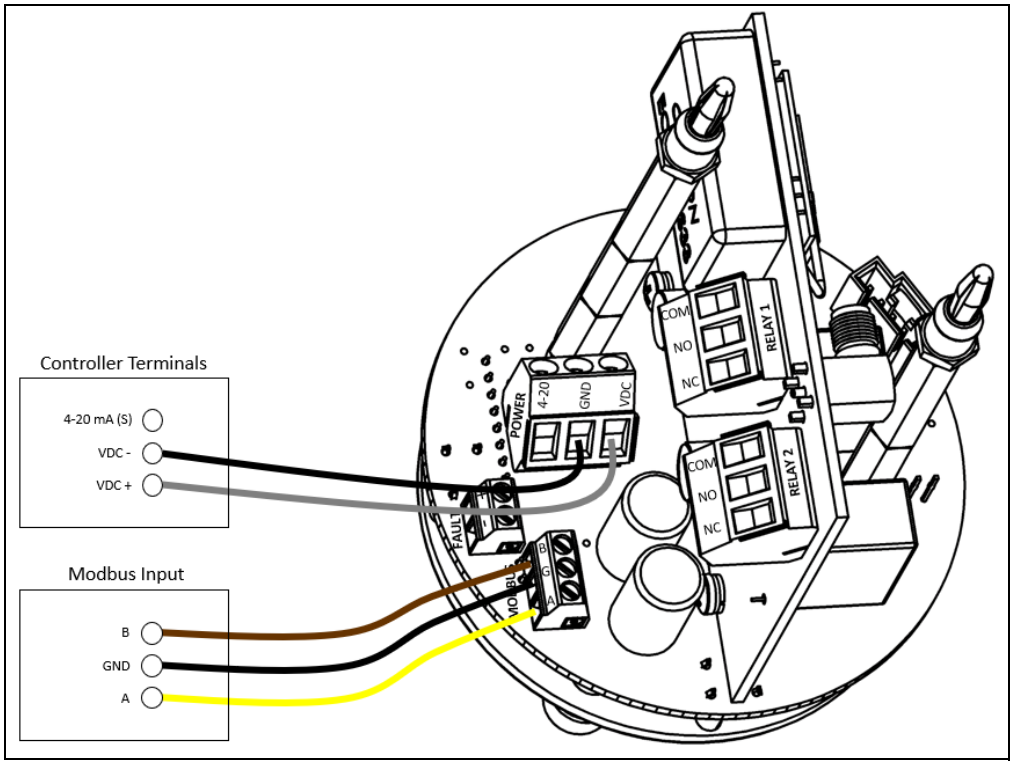

Figure 7: Modbus Wiring

NOTE: If an RKI controller is not used, the T3A can be connected to a Programmable Logic Controller (PLC) for RS-485 Modbus data communications. For integration and setup, refer to the Modbus Register Map found in Appendix C of this manual.

Connecting Relays/Alarms

The T3A relays are commonly used to power and control external alarming devices, such as alarm lights (visual) and horns (audio).

NOTE: Relays are protected by replaceable 4A fuses.

Table 4: T3A Terminal Block Wire Gauges

Terminal Block	Wire Gauge
Power terminal	Min: 26 AWG Max: 14 AWG
Relay 1 & 2 terminal	
Modbus terminal	Min: 26 AWG Max: 16 AWG
Fault terminal	

1. If necessary, unscrew the enclosure lid and pull the internal system out by the thumbscrews.

   CAUTION: *Be sure power to the T3A is off before pulling out the internal system.*

2. Feed the relay/alarm wiring through the 3/4 NPT power hub and into the enclosure.
3. Locate the relay terminal blocks on the radio/relay board.

   WARNING: ***Use appropriate construction technique to maintain the explosion-proof classification of the assembly.***

4. Connect the alarm device's power (RED) terminal to the **NO** or **NC** terminal on the relay terminal block.

   NOTE: It is recommended that the relay connections are wired as normally-open (NO). However, normally-closed (NC) wiring configurations provide an inherent fail-safe and may be preferred.

5. Connect the alarm device's ground terminal (GREEN) to an external power source's "-" terminal.

6. Connect the external power source's "+" terminal (GRAY) to the **COM** terminal on the relay terminal block.

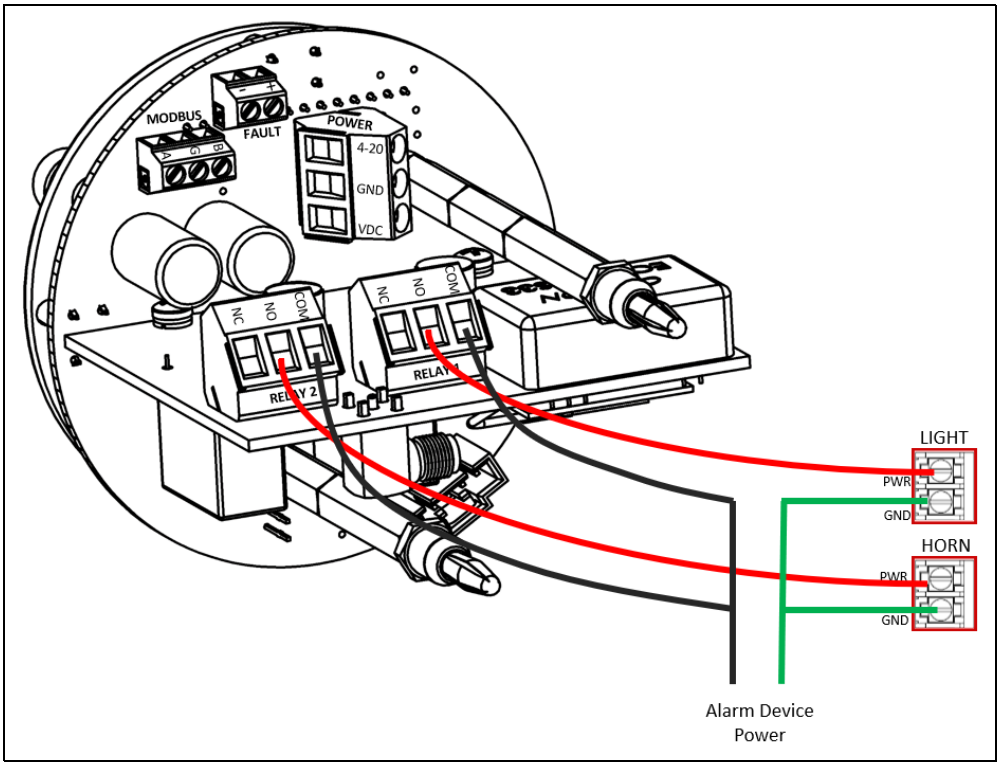

Figure 8: Relay Wiring

Connecting the Fault Terminal

The fault terminal is used to provide indication of a device failure (for reasons listed on page 57 or for a power failure). The fault terminal is shipped configured as a normally-closed (NC), or fail-safe, configuration, terminating power to the external fault device when prompted. Changing this behavior is detailed on page 36.

Unlike the optional relay terminals, the fault terminal is a wet-contact, requiring only the power and ground wires of the external fault device to be wired during installation. During normal operation, the fault terminal provides a maximum of 500 mA at the same voltage that is provided to the power terminal block.

Table 5: T3A Terminal Block Wire Gauges

Terminal Block	Wire Gauge
Power terminal	Min: 26 AWG Max: 14 AWG
Relay 1 & 2 terminal	
Modbus terminal	Min: 26 AWG Max: 16 AWG
Fault terminal	

1. If necessary, unscrew the enclosure lid and pull the internal system out by the thumbscrews.

   CAUTION: *Be sure power to the T3A is off before pulling out the internal system.*

2. Locate the power (RED) and ground (BLACK) wires on the alarming device.

   WARNING: ***Use appropriate construction technique to maintain the explosion-proof classification of the assembly.***

3. Feed the alarming device's wires through the 3/4 NPT power hub and into the enclosure.
4. Locate the fault terminal block on the control board.
5. Connect the external fault device power (RED) wire to the + terminal.

6. Connect the external fault device ground (BLACK) wire to the **-** terminal.

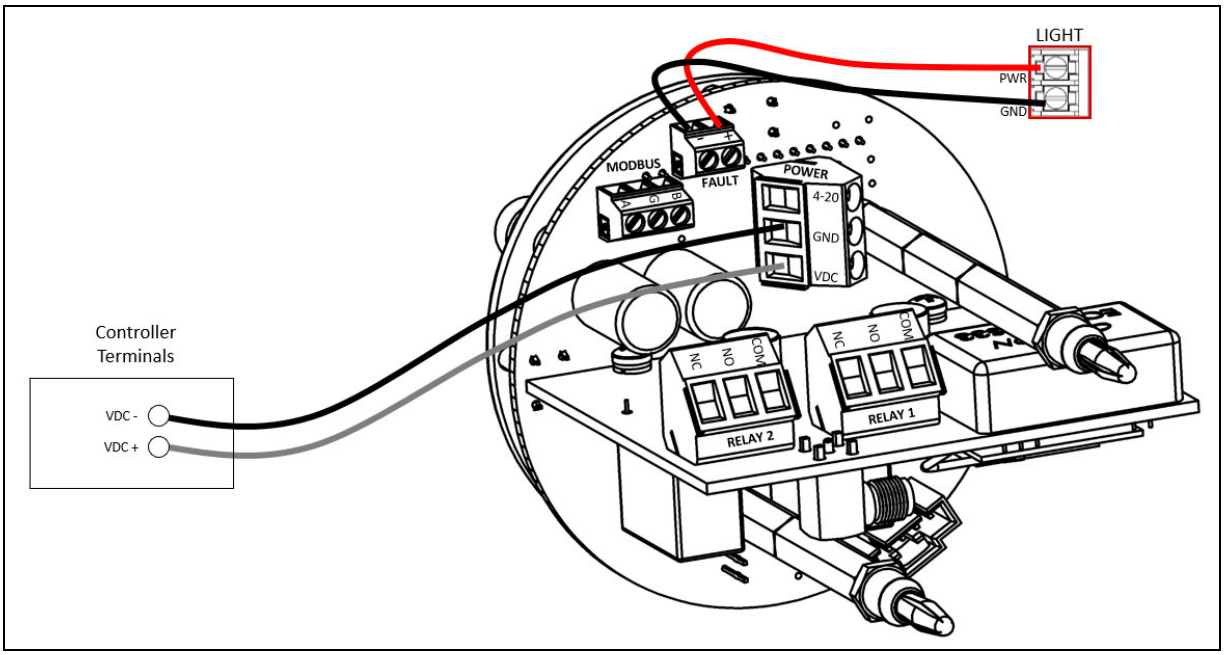

Figure 9: Fault Terminal Wiring

Closing the Enclosure

1. Place the internal system back into the enclosure, matching each mounting post to its corresponding eyelet anchored within the base of the enclosure.
2. Using the thumbscrews, gently push to seat the internal system into the mounting posts.

NOTE: The thumbscrews on the T3A function **ONLY** as thumb-holds for ease in removal of the internal system from the base of the enclosure. Do **NOT** attempt to loosen or tighten the thumbscrews when opening or closing the enclosure.

---

3. Verify that the sealing ring, seated at the threaded opening of the device enclosure, is correctly in place.
4. Secure the enclosure lid back onto the enclosure.

WARNING: ***When securing the lid onto the device, tighten the enclosure lid by hand ONLY. Overtightening of the lid by use of hand-tools could result in damage to the O-ring, potentially compromising the moisture seal, resulting in an unsafe environment.***

Start Up

This section describes procedures to start up the T3A and place the T3A into normal operation.

1. Complete the installation procedures described earlier in this manual.
2. Verify that the power wiring is correct and secure.
3. Turn on the power source.
4. Verify that the controller is on and operating properly. Refer to the controller operator's manual.
5. The T3A automatically powers on and enters a 1-minute startup period.

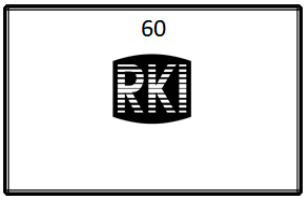

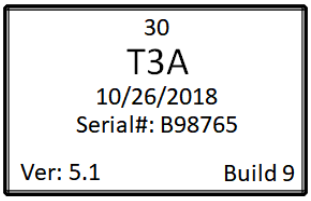

6. At the end of the startup, the T3A is in Normal Operating Mode.

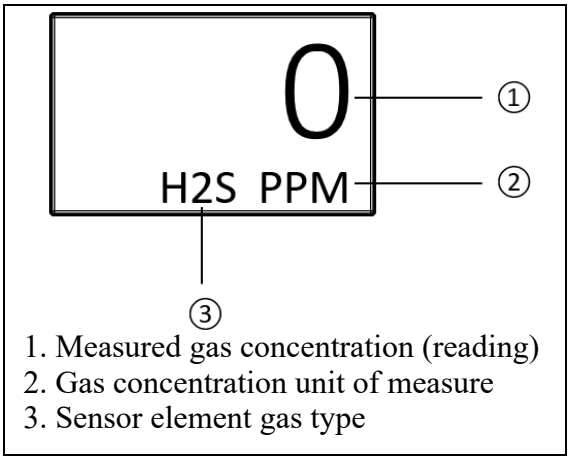

7. Allow the detector to warmup for the appropriate amount of time as shown below, depending on the sensor type.

Detection Gas	**Warmup Time After an Extended Time Off Power**	**Warmup Time After a Short Time Off Power**
Ammonia (NH_3)	12 hours	4 hours
Arsine (AsH_3)	2 hours	10 minutes
Carbon Dioxide (CO_2)	10 minutes	
Carbon Monoxide (CO)	2 hours	
Chlorine (Cl_2)		
Chlorine Dioxide (ClO_2)		
Combustible Gas	10 minutes	
Ethylene Oxide (EtO)	48 hours	
Formaldehyde (CH_2O)	10 minutes	
Hydrogen (H_2)	2 hours	
Hydrogen Chloride (HCl)	12 hours	
Hydrogen Cyanide (HCN)		
Hydrogen Fluoride (HF)	2 hours	
Hydrogen Sulfide (H_2S)		
Nitric Oxide (NO)	72 hours	
Nitrogen Dioxide (NO_2)	2 hours	
Oxygen (O_2)		
Ozone (O_3)		
Phosphine (PH_3)		
Sulfur Dioxide (SO_2)		

8. The T3A is factory-calibrated before shipping from RKI. If a full calibration is desired at startup, see page 47.

Operation

WARNING: ***Do not remove the sensor housing cap or enclosure lid while the circuits are energized unless the area is determined to be non-hazardous. Keep the sensor housing cap and enclosure lid tightly closed during operation.***

Normal Operating Mode

While in Normal Operating Mode, the T3A continuously samples the air and updates the measured concentration of the target gas on the display screen. The display, when in Normal Operating Mode, appears as shown below.

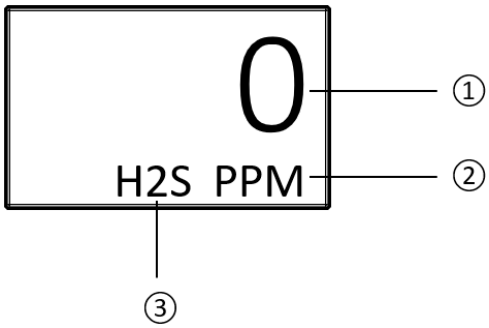

1. Measured gas concentration (reading)
2. Gas concentration unit of measure
3. Sensor element gas type

Reading above full scale
(4-20 mA output is 25 mA)

Magnetic Buttons

Use the provided magnet to actuate the T3A's buttons without having to remove the junction box's lid. Touch the magnet to the outer edge of the junction box lid near the button you want to actuate. Tapping the junction box is the same and pressing and releasing the button. Holding the magnet against the junction box is the same as pressing and holding the button.

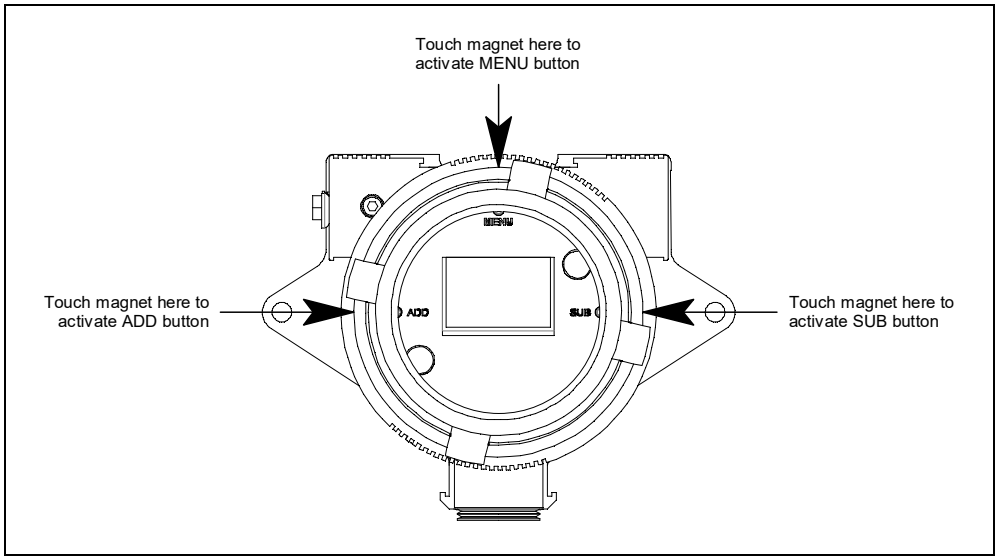

Powering the Device

When power is first applied to the T3A, the unit automatically powers on and begins the startup sequence. The directions below describe how to power off and power on the T3A once power has been applied.

Powering Off

Powering off the device stops the operation of the unit. The Product Settings and Configuration, as well as the operation settings, including the zero and calibration of the sensor, will be unaffected.

1. Press and hold the SUB button for approximately 6 seconds, until “OFF” shows on the display screen.

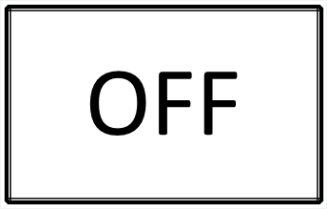

2. The display screen will continue to show “OFF” for the duration of time that the unit is powered off, as long as uninterrupted power is supplied to the unit.

Powering On

Powering on the device begins the operation of the unit, automatically initiating the system start-up cycle and 1-minute warmup period. The T3A will be in normal operating mode at the completion of the system start-up.

To turn the T3A on, press ADD once.

Manual Reset for Activated Latching Alarms

Relay alarms set to latching will not deactivate until the alarms are manually reset at the device. This includes Alarm 1 and Alarm 2 indicator LEDs and optional wired relays. When latching alarms have been activated, refer to the following instructions for how to manually deactivate the alarms on your device:

1. Verify that the gas level reading is below the alarm level setting.
2. Press the MENU button to deactivate latching alarm(s).

NOTE: The gas level reading MUST be below the alarm level setting before the alarm can be deactivated. Press the MENU button ONLY once to deactivate the latching alarm(s). Pressing the MENU button more than once will activate and open the Operation Settings menu. The alarms will NOT activate, even in the presence of gas, until you have exited the menu mode for approximately 1 minute.

Faults

In the event of a device failure, the unit will alternate between the normal operating screen and a fault screen on the display, in 5 second intervals, until the fault has been cleared, or is corrected. The fault code, located in the bottom-left corner of the display, appears on both screens. The unit continuously registers that the system is in fault. When the fault is corrected, the unit will return to normal operating mode.

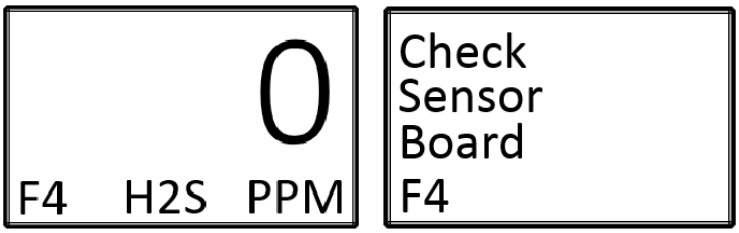

For a list of the fault codes and warning symbols of the T3A, and their associated meaning, see page 57.

Accessing Menus

Both system menus are accessible from Normal Operating Mode. To access the Product Settings and Configuration menu, **press and hold** the **MENU** button, for approximately 6 seconds, until the menu is activated and open on the display screen. To access the Operation Settings menu from Normal Operating Mode, press and release the **MENU** button once and the menu will open and show on the display.

NOTE: After 5 minutes of no interaction with the device, the unit will automatically return to normal operating mode.

Product Settings and Configuration

The Product Settings and Configuration menu allows the end-user to tailor the device settings to meet their required specifications and/or site conditions.

The T3A continues monitoring for gas while in the Product Settings and Configuration menu.

The Product Settings and Configuration menu consists of the following screens:

- Alarm Test (see page 33)
- System Information (see page 34)
- Zero/Calibration Timers (see page 34)
- Unit Info (see page 35)
- Relay 1: Latching/Auto Resetting Setting (see page 35)
- Relay 2: Latching/Auto Resetting Setting (see page 36)
- Relay 1: Fail-Safe Setting (see page 36)
- Relay 2: Fail-Safe Setting (see page 38)
- Fault Terminal Fail-Safe Setting (see page 38)
- Calibration Method (see page 39)
- RS-485 Modbus Address Setting (see page 39)
- RS-485 Modbus Baud Setting (see page 40)
- 4-20 mA Offset Settings: Zero Offset Setting, Full-Scale Offset Setting (see page 41)
- Display Screen Contrast Setting (see page 42)
- Return to Factory Default Settings (see page 43)
- Reset Zero and Calibration Values Only (see page 45)

Entering the Product Settings and Configuration Menu

While the device is in normal operating mode, **press and hold** the **MENU** button, for approximately 6 seconds, until the Product Settings and Configuration menu is activated and open on the display screen.

NOTE: After 5 minutes of no interaction with the device, the unit will automatically return to normal operating mode.

NOTE: The alarms will NOT activate, even in the presence of gas, until you have been out of the Product Settings and Configuration menu for 1 minute.

Alarm Test

The alarm test simulates a gas level reading. The alarm test is used to ensure the proper functionality of the relay settings on the controller. The test can also be used to simulate emergency/safety drills onsite.

NOTE: Triggering T3A relays will also simulate Alarm 1 and Alarm 2 relays at the controller. Controllers cannot distinguish between real and simulated data received. When the controller relays are triggered, alarm devices will perform as intended, initiating emergency procedures as if a harmful or toxic gas was actually present. To prevent this from occurring, set the controller to calibration mode before performing the alarm test. Calibration mode allows data transmission without relay activation.

It is recommended that an alarm test be conducted EVERY 30 days, alongside the maintenance and calibration of the detector.

Performing the Alarm Test

The alarm test gas level reading can be increased or decreased in increments of 5% of the sensor scale, up to 100% of the sensor scale.

1. Enter the Product Settings and Configuration menu by pressing and holding the MENU button for 6 seconds. The alarm test screen appears.

2. Press the ADD button until the Alarm 1 and Alarm 2 levels are reached and the relay(s) are triggered to light all visual alarm(s) and sound all audio alarm(s) on the controller.
3. Once all relays have been tested and the test is complete, press the SUB button to return the alarm test reading back to zero and to deactivate the controller alarm(s).
4. Use the MENU button to scroll through the rest of the Product Settings and Configuration menu and return to Normal Operating Mode.

System Information

The system information screen allows the end-user to view the following information:

- The scale of the sensor element.
- The supply voltage of the sensor unit.
- The voltage value (in volts) that the sensor was reading when zeroed.
- The current voltage value (in volts) that the sensor element is reading.

This screen is for informational purposes only.

1. If necessary, enter the Product Settings and Configuration menu by pressing and holding the MENU button for 6 seconds.
2. Press and release the MENU button until the System Information screen appears.

```
SYSTEM

Scale:  100
Battery:  23.8v
Null:   0.2150v
Sens:  0.2150v
```

3. Review the information displayed.
4. Use the MENU button to scroll through the rest of the Product Settings and Configuration menu and return to Normal Operating Mode.

Zero/Calibration Timer Information

The zero/calibration time information screen allows the end-user to view the following information:

- The days since the sensor assembly was last zeroed.
- The days since the sensor assembly was last calibrated.
- The calibration number of the sensor, used for diagnostic purposes.

This screen is for informational purposes only.

NOTE: The Cal field automatically updates after an Auto Cal. When performing a Manual Cal, the gas reading must be adjusted by at least one button press to get the Cal field to update.

---

1. If necessary, enter the Product Settings and Configuration menu by pressing and holding the MENU button for 6 seconds.
2. Press and release the MENU button until the Zero/Calibration Timer Information screen appears.

```
LAST SETUP TIMES:

Zero: 1 Day(s)
Cal: 1 Day(s)
Cal #: 0.00
```

3. Review the information displayed.
4. Use the MENU button to scroll through the rest of the Product Settings and Configuration menu and return to Normal Operating Mode.

Unit Information

The unit information screen allows the end-user to view the following information:

- The date of manufacture of the sensor assembly.
- The serial number of the sensor assembly.

This screen is for informational purposes only.

1. If necessary, enter the Product Settings and Configuration menu by pressing and holding the MENU button for 6 seconds.
2. Press and release the MENU button until the Unit Information screen appears.

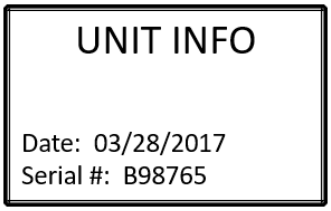

3. Review the information displayed.
4. Use the MENU button to scroll through the rest of the Product Settings and Configuration menu and return to Normal Operating Mode.

Latching and Auto Resetting Relay Settings

Relay 1 and Relay 2 can be set to latching or auto resetting. Relays set to auto resetting will automatically deactivate when the detected gas level falls below the corresponding alarm setting. Conversely, latching relays, once activated, MUST be manually reset at the device, regardless of the change in gas detection level readings.

The factory default settings for Relay 1 and Relay 2 are auto resetting. During installation and setup, Relay 1 and Relay 2 are commonly customized as the following:

Table 6: Common Relay 1 and Relay 2 Settings

Relay	Alarm Setting	Latching/Auto Reset
Relay 1	Alarm 1	Auto Reset
Relay 2	Alarm 2	Latching

Relay 1: Latching/Auto Reset Setting

1. If necessary, enter the Product Settings and Configuration menu by pressing and holding the MENU button for 6 seconds.

2. Press and release the MENU button until the Relay 1 Latching/Auto Resetting screen appears.

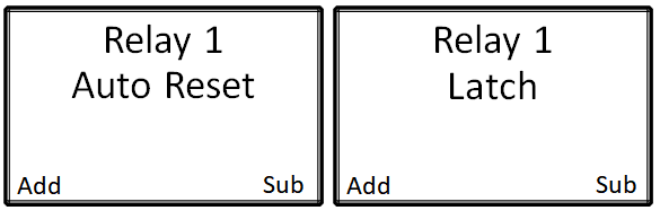

3. Use the ADD and SUB buttons to toggle between the “Auto Reset” and “Latch” options.
4. Press the MENU button to select the desired setting and to advance to the Relay 2 latching/ auto reset setting screen.

NOTE: For auto resetting alarms, the alarms will NOT deactivate until the gas level reading at the sensor has fallen 10% below the alarm set-point. For latching alarms, the gas level reading MUST be below the alarm set-point before the alarm can be deactivated. The alarms will NOT activate, even in the presence of gas, until you have exited the menu mode for approximately 1 minute.

Relay 2: Latching/Auto Reset Setting

1. If necessary, enter the Product Settings and Configuration menu by pressing and holding the MENU button for 6 seconds.
2. Press and release the MENU button until the Relay 2 Latching/Auto Reset screen appears.

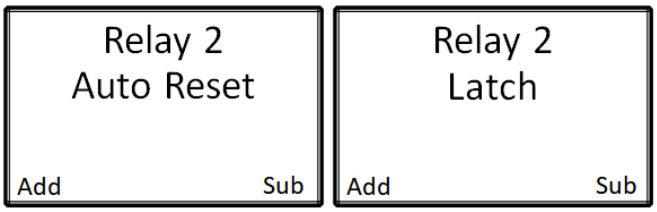

3. Use the ADD and SUB buttons to toggle between the “Auto Reset” and “Latch” options.
4. Use the MENU button to scroll through the rest of the Product Settings and Configuration menu and return to Normal Operating Mode.

Relay Fail-Safe Setting

From a safety perspective, any unknown situation must be considered potentially hazardous. When a stand-alone gas detector is unable to detect gas, an unknown condition is created and precautions must be taken to prevent personal injury or loss of life. This means that the device must be able to alert the end-user that it is no longer fully operational. This safety function is made possible by the fault terminal. For more information about the fault terminal and for instructions on how to wire your device, refer to the Connecting the Fault Terminal section of this manual.

Site specific circumstances may prevent the use of the fault terminal, leading to potentially dangerous situations without end-user notification. In response, the T3A provides a relay fail-safe setting to enhance the safety protection provided when the fault terminal cannot be used.

The relay fail-safe setting reverses the behavior of the relays and allows a deactivated relay to serve as a warning of a potentially hazardous event. In fail-safe mode, the relays are activated upon device start-up and deactivated during alarm conditions and when the device is turned off. Some device failures, such as loss of power and firmware corruption, will also deactivate the relay.

NOTE: For maximum safety, the fault terminal MUST be used. A fail-safe relay will NOT notify the user of all potential device failures. The fail-safe setting should ONLY be enabled to provide enhanced safety protection when the fault terminal CANNOT be used.

The factory default settings on the T3A for Relay 1 and Relay 2 fail-safe are No (Off).

If the fault terminal cannot be used, RKI Instruments recommends one of the following configurations:

Table 7: Recommended Configurations for Relay Fail-Safe Setting

Power Source	Relay Wiring	Fail-Safe	Outcome
External Power Supply	Normally-Closed (NC)	Yes (On)	Normal Operation: Open Alarm Activation: Closed
External Power Supply	Normally-Open (NO)	Yes (On)	Normal Operation: Closed Alarm Activation: Open

Relay 1: Fail-Safe Setting

1. If necessary, enter the Product Settings and Configuration menu by pressing and holding the MENU button for 6 seconds.
2. Press and release the MENU button until the Relay 1 Failsafe screen appears.

3. Use the ADD and SUB buttons to select the desired fail-safe setting for Relay 1. Select “Yes” to turn the fail-safe setting on, or select “No” to leave the fail-safe setting off.
4. Press the MENU button to select the desired setting and to advance to the Relay 2 fail-safe setting screen.

Relay 2: Fail-Safe Setting

1. If necessary, enter the Product Settings and Configuration menu by pressing and holding the MENU button for 6 seconds.
2. Press and release the MENU button until the Relay 2 Failsafe screen appears.

3. Use the ADD and SUB buttons to select the desired fail-safe setting for Relay 2. Select “Yes” to turn the fail-safe setting on, or select “No” to leave the fail-safe setting off.
4. Use the MENU button to scroll through the rest of the Product Settings and Configuration menu and return to Normal Operating Mode.

Fault Terminal Fail-Safe Setting

The Fault Terminal Fail-Safe status behavior can be adjusted to either activate during a fault condition or deactivate during a fault condition. The default setting is to deactivate during a fault condition, this setting should only be adjusted if the opposite behavior is desired.

Fault Terminal: Fail-Safe Setting

1. If necessary, enter the Product Settings and Configuration menu by pressing and holding the MENU button for 6 seconds.
2. Press and release the MENU button until the Fault Terminal Failsafe screen appears.

3. Use the ADD and SUB buttons to select the desired fail-safe setting for the Fault Terminal. Select “Yes” to turn the fail-safe setting on, or select “No” to turn the fail-safe setting off.
4. Use the MENU button to scroll through the rest of the Product Settings and Configuration menu and return to Normal Operating Mode.

Calibration Method

NOTE: LEL and CO_2 - This screen does not appear in LEL or CO_2 versions of the T3A because those sensors can only be calibrated using Auto Cal.

HCl - It is recommended that the HCl version only be calibrated using Auto Cal, but Manual Cal can be used if desired.

AsH_3 and HF - It is recommended that AsH_3 and HF versions only be calibrated using Manual Cal.

The calibration method selection allows you to choose how you calibrate the sensor element.

Manual Calibration (factory setting): Use the ADD and SUB buttons during calibration to match the reading shown on the screen to the value of the gas being applied.

Auto Calibration: Sets the reading, after a predetermined amount of time, during calibration to the value entered during the auto calibration setup process.

1. If necessary, enter the Product Settings and Configuration menu by pressing and holding the MENU button for 6 seconds.
2. Press and release the MENU button until the Cal Method screen appears.

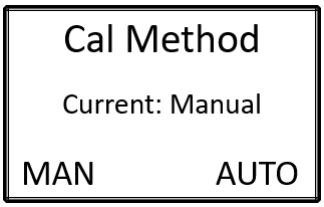

3. Use the ADD button to select manual calibration and the SUB button to select auto calibration.
4. Use the MENU button to scroll through the rest of the Product Settings and Configuration menu and return to Normal Operating Mode.

Modbus Address Setting

Modbus is the leading industrial open control protocol. Modbus is available in several different types, depending upon the media over which it is transmitted. Like most communication protocols, Modbus uses a master/client type behavior. The master sends a poll request for information to the client, the client decodes the request, and then sends a response with the requested data back to the master.

A Modbus message includes a Modbus address, commonly referred to as a unit ID. The Modbus address is used to identify the server address in RS-485 networks. Each server is assigned an address and listens for messages which contain this number in the Modbus address field.

The T3A uses the original Modbus RTU over the RS-485 link. RS-485 Modbus has 255 addresses, ranging from 1 to 255. Eight of the addresses are used for internal system settings, leaving addresses 1 to 247 available for your device.

The RS-485 Modbus communication parameters used in the T3A is 8 data bits, no parity, and 1 stop bit; these parameters are fixed and cannot be changed. The floating point data values are presented with the least significant bytes first.

When using Modbus over a RS-485 network, the communication parameters MUST be set correctly for all devices. For multiple devices using Modbus, ensure that no two units are assigned the same address. A duplication of addresses could cause errors in the transmission of data. Modbus addresses can be assigned sequentially or another appropriate address scheme for the specific network setup.

The factory default setting on the T3A for the Modbus address setting is 1.

1. If necessary, enter the Product Settings and Configuration menu by pressing and holding the MENU button for 6 seconds.
2. Press and release the MENU button until the Modbus Address screen appears.

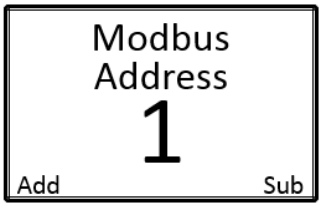

3. Use the ADD and SUB buttons to increase and decrease the Modbus address number, respectively.
4. Use the MENU button to scroll through the rest of the Product Settings and Configuration menu and return to Normal Operating Mode.

Modbus Baud Setting

The baud rate is the speed of data transmitted within the Modbus system, measured in bits per second (bps). For successful communication, the baud rate setting of the T3A MUST match the baud rate setting on the connected controller or other Modbus device.

The T3A's default Modbus baud setting is 9600 bps. The RS-485 Modbus communication parameters used in the T3A are 8 data bits, no parity bit, and 1 stop bit (8-N-1) these parameters are fixed and cannot be changed. Some devices come with different Modbus baud rates. Check with your system administrator to determine if a different Modbus baud setting is needed for your system.

The pre-set Modbus baud settings available for the T3A are the following:

- 110 bps
- 300 bps
- 1200 bps
- 2400 bps
- 4800 bps
- 9600 bps

- 19200 bps

1. If necessary, enter the Product Settings and Configuration menu by pressing and holding the MENU button for 6 seconds.
2. Press and release the MENU button until the Modbus Baud screen appears.

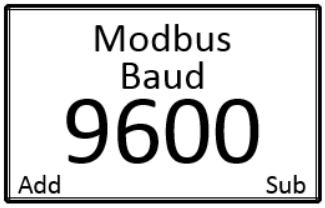

3. Use the ADD and SUB buttons to scroll through the available Modbus baud options.
4. Use the MENU button to scroll through the rest of the Product Settings and Configuration menu and return to Normal Operating Mode.

4-20 mA Offset Settings

Setting the 4-20 mA offset allows the end-user to calibrate the sensor's analog output. Upon installation of the device, if the detected gas reading on T3A does not correspond to the reading on the controller, the zero offset (4 mA) and the full-scale offset (20 mA) can be adjusted on the unit.

Over time, as electronic components suffer from normal wear and tear, the circuits will tend to drift. This drift can cause variances in the amount of current output by the sensor, or in the current measurement by the controller. If at any time the reading on the T3A no longer matches the reading on the controller, the 4-20 mA offset will need to be recalibrated.

The factory default settings on the T3A for the 4-20 mA offset are 4.00 mA for the zero offset and 20.00 mA for the full-scale offset.

1. If necessary, enter the Product Settings and Configuration menu by pressing and holding the MENU button for 6 seconds.
2. Press and release the MENU button until the 4-20 mA Offset screen appears.

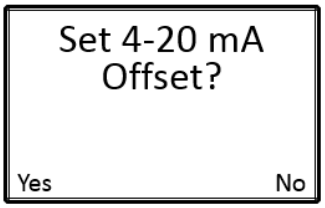

3. Press and release the ADD button to set the 4-20 mA offset and advance to the zero offset setting screen. If you do not wish to set the 4-20 mA offset, press and release the SUB or MENU button to advance to the display screen contrast setting screen.

Zero Offset Setting

If “Yes” is selected to set the 4-20 mA offset:

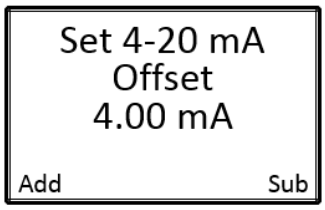

1. Use the ADD and SUB buttons to increase and decrease the zero offset on the unit, respectively, until the controller reads 0 %/ppm, depending on the gas type being detected.
2. Press the MENU button to save the desired setting and to advance to the full-scale offset setting screen.

Full-Scale Offset Setting

NOTE: Adjusting the full-scale offset will initiate alarm conditions. Disable the alarms or make sure all personnel are aware that any alarms are false.

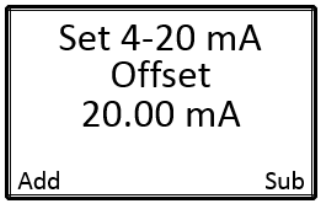

1. Use the ADD and SUB buttons to increase and decrease the full-scale offset, respectively, until the controller reads the full scale value for that channel.
2. Press the MENU button to save the desired setting and to advance to the display screen contrast setting screen.

Display Screen Contrast Setting

The display screen contrast is the difference in luminance or color that makes the displayed images distinguishable. Due to varying external elements, such as extreme sunlight, the brightness of the display screen may need to be adjusted for optimum viewing.

The factory default setting on the T3A for the display screen contrast is 29, approximately 45% of the contrast scale. The contrast setting ranges from 1 to 64.

NOTE: Setting the contrast too low will cause the display image to become faint or indistinguishable, especially when the unit is located in areas with full-sun. The resulting field of view could be misinterpreted as an error within the device. Be sure to verify that the selected contract is within an appropriate range of viewing.

---

1. If necessary, enter the Product Settings and Configuration menu by pressing and holding the MENU button for 6 seconds.

2. Press and release the MENU button until the Contrast screen appears.

3. Use the ADD and SUB buttons to brighten and dim the contrast, respectively.
4. Use the MENU button to scroll through the rest of the Product Settings and Configuration menu and return to Normal Operating Mode.

Return to Factory Default Settings

Returning the T3A to its factory default settings will reset all customization of the device, including the zero and calibration settings of the sensor element. A factory default does not change the gas type.

Table 8: T3A Product and Configuration Factory Default Settings

Configuration	Setting
Network ID	5
Zero/Calibration Timer	*Cleared*
Background Setting	4
Relay 1: Latching/Auto Reset	Auto Reset
Relay 2: Latching/Auto Reset	Auto Reset
Relay 1: Fail-Safe Setting	No (Off)
Relay 2: Fail-Safe Setting	No (Off)
Calibration Method	Manual
RS-485 Modbus Address Setting	1
RS-485 Modbus Baud Setting	9600 bps
4-20 mA Zero Offset Setting	4.00 mA
4-20 mA Full-Scale Offset Setting	20.00 mA
Sensor Element Zero	*Cleared*
Sensor Element Calibration	*Cleared*
Sensor Assembly Alarm 1 Setting	10% of Sensor Scale
Sensor Assembly Alarm 1 Increasing/Decreasing Setting	Increasing
Sensor Assembly Alarm 2 Setting	15% of Sensor Scale
Sensor Assembly Alarm 2 Increasing/Decreasing Setting	Increasing

1. If necessary, enter the Product Settings and Configuration menu by pressing and holding the MENU button for 6 seconds.

2. Press and release the MENU button until the Return to Factory Default screen appears.

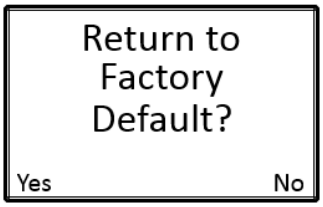

3. Press the ADD button to return the device to its factory default settings and to advance to the return to factory default settings confirmation screen. If you do not wish to return the device to its factory default settings, press the SUB or MENU button to continue to the Reset Zero & Cal Only screen.

4. If "Yes" is selected to return the device to its factory default settings:

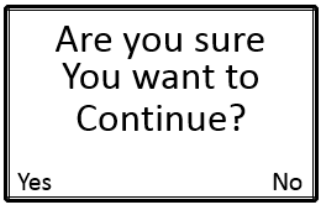

5. Press the ADD button to select "Yes" to confirm that you want to reset the device to its factory default settings and to return the device to normal operating mode. If you do not wish to continue to return the device to its factory default settings, press the SUB button to select "No" to continue to the Reset Zero & Cal Only screen.

6. Use the MENU button to scroll through the rest of the Product Settings and Configuration menu and return to Normal Operating Mode.

NOTE: If the T3A is reset to the factory default settings, ALL configuration steps MUST be repeated and the device MUST then be zeroed and calibrated for proper operation of the device.

Reset Zero & Calibration Values

Resetting the zero and calibration settings of the sensor element will allow the currently stored zero and calibration values to be rest without having to reconfigure all of the other operational settings like with the Return to Factory Defaults option.

1. If necessary, enter the Product Settings and Configuration menu by pressing and holding the MENU button for 6 seconds.

2. Press and release the MENU button until the Reset Zero & Calibration Values screen appears.

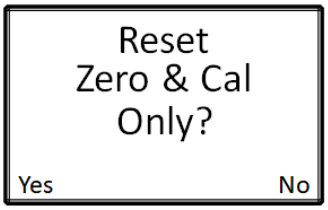

3. Press the ADD button to select "Yes" to reset the Zero and Calibration values and to advance to the Reset Zero & Cal Only confirmation screen. If you do not wish to reset the zero and calibration values, press the SUB button to select "No" to leave the Product Settings and Configuration menu and to return the device to normal operating mode.

4. If “Yes” is selected to reset the zero and calibration values:

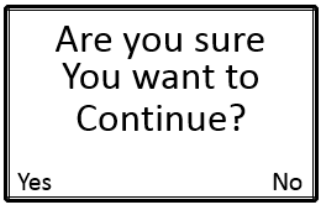

5. Press the ADD button to select “Yes” to confirm that you want to reset the Zero and Calibration values and to return the device to normal operating mode. If you do not wish to continue to reset the Zero and Calibration values, press the SUB button to select “No” to leave the Product Settings and Configuration menu and to return the device to normal operating mode.

6. Press and release the MENU button to return to Normal Operating Mode.

NOTE: If the T3A’s stored Zero and Calibration values are reset, the device MUST be zeroed and calibrated for proper and safe operation of the device.

Operation Settings and Calibration

The Operation Settings menu allows you to:

- perform a zero adjust
- perform a span adjust
- change sensor alarm settings

NOTE: After 5 minutes of no interaction with the device, the unit will automatically return to normal operating mode.

NOTE: The alarms will NOT activate, even in the presence of gas, until you have been out of the Operation Settings menu for 1 minute.

The T3A continues monitoring for gas while in the Operation Settings menu.

Zeroing the Sensor (20.9% for O_2)

The first step of calibration is zeroing (20.9% for O_2). The zeroing (20.9% for O_2) process MUST be performed in known clean air, with no contaminants or hazardous gases present. If air quality cannot be guaranteed, a cylinder of zero air will be required to properly zero the sensor.

Materials

- 0.5 LPM fixed flow regulator with knob
- calibration cup
- calibration tubing
- zero air cylinder (for CO_2 sensor or if not in a fresh air environment)
- 100% N_2 cylinder (if zeroing a CO_2 sensor)

NOTE: Since there is a background of CO_2 in air, it is necessary to use a CO_2-free cylinder when zeroing a CO_2 sensor.

1. While the product is in normal operating mode, press the MENU button to activate the Operation Settings menu.

Zero Press ADD to auto zero.	Zero (20.9% O2) Press ADD to auto zero.
Non-O2 sensor	O2 sensor

2. Press the ADD button to begin the zero process and advance to the clean air confirmation screen.

3. If the sensor is in clean air, press the ADD button to select “Yes” and continue to Step 5.
4. For CO_2 sensors or if the sensor is not in clear air:
   a. If a rain guard is installed, unscrew and remove it from the assembly.
   b. Install the calibration cup to the T3A’s sensor housing.
   c. Screw the regulator into the zero air calibration cylinder (100% N_2 cylinder if zeroing a CO_2 sensor).
   d. Use the sample tubing to connect the regulator to the calibration cup.
   e. Turn the regulator knob counterclockwise to open the regulator.
   f. Allow the gas to flow for 1 minute.
   g. Press the ADD button to select “Yes” and continue to Step 5.
5. The unit will automatically begin the 6-second zero process. During the zero, the display will show a countdown of the time remaining until the process is complete.

NOTE: The zero process cannot be stopped without disconnecting the power from the unit.

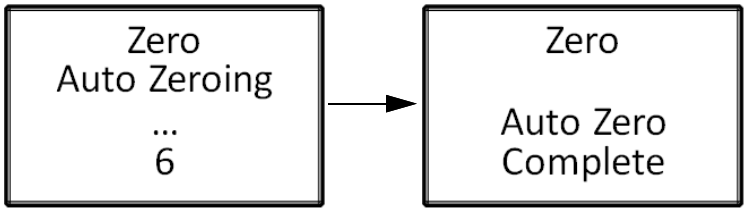

6. When the zero process is complete, press the MENU button to advance to the calibration screen.
7. If a zero air calibration cylinder (or 100% N_2 cylinder for CO_2 sensors) was used, turn the regulator knob clockwise to close the regulator.

Calibrating the Sensor (Manual Cal)

Either the Manual Cal screen or the Auto Cal screen appear, depending on how Calibration Method is set in the Product Settings and Configuration Menu (see page 39).

NOTE: LEL and CO_2 - LEL and CO_2 versions of the T3A can only be calibrated using Auto Cal (see the next section).

HCl - It is recommended that the HCl version only be calibrated using Auto Cal, but Manual Cal can be used if desired.

You should ONLY calibrate the sensor after completing the zero process.

Calibration Frequency

A calibration should be performed EVERY thirty (30) days. Days since the last calibration should NEVER exceed ninety (90) days. RKI recommends that you calibrate your device regularly to ensure proper functionality and a safe work environment.

Materials

- 0.5 LPM fixed flow regulator with knob and calibration tubing

---

WARNING: ***If calibrating with Cl_2 or HCl, a regulator must be dedicated for use with that gas only. Do not use that dedicated regulator for any other gases, particularly H_2S.***

- calibration cup
- calibration cylinder or gas generator (For O_2 sensors, RKI recommends using 10-18% O_2. For all other sensors, RKI recommends using 50% of the full scale value of your detected gas.)

NOTE: Some detected gases use surrogate gases for calibration. Detected gases needing a surrogate gas for calibration are listed below. If you are using a surrogate gas for calibration, that surrogate gas concentration multiplied by the factor listed below should equal about 50% of the detected gas' full scale.

Table 9: Surrogate Calibration Gases

Detected Gas	Surrogate Calibration Gas	Factor
Arsine (AsH_3)	Phospine (PH_3)	1.4
Chlorine Dioxide (ClO_2)	Chlorine (Cl_2)	1
Formaldehyde (CH_2O)	Carbon Monoxide (CO)	0.2
Hydrogen Fluoride (HF)	Chlorine (Cl_2)	7.5
Ozone (O_3)	Chlorine (Cl_2)	0.8
	Nitrogen Dioxide (NO_2)	1

Procedure

1. For EtO calibration gas: Connect the tubing to the regulator, turn the regulator on, and allow gas to flow for **1 minute** before proceeding.

   For HCl calibration gas: Connect the tubing to the regulator, turn the regulator on, and allow gas to flow for **10 minutes** before proceeding.

2. If you followed the instructions in Zeroing the Sensor (20.9% for O_2), the screen below is displayed.

   If you are accessing Manual Cal from Normal Operating Mode, press MENU twice.

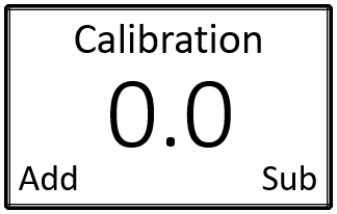

3. If a rain guard is installed, unscrew and remove it from the assembly.
4. Install the calibration cup to the T3A's sensor housing.
5. Use the sample tubing to connect the regulator to the calibration cup.
6. For toxic gas cylinders, like Cl_2, it is important to vent the regulator while installing it onto the cylinder. Open the regulator by turning the knob counterclockwise and install it onto the cylinder.

WARNING: Be sure to use a breathing apparatus and to ventilate the area well when calibrating with high concentrations of toxic gases.

7. After 20-30 seconds, start using the ADD and SUB buttons to adjust the reading to match the concentration listed on the calibration cylinder.

8. For all calibration gases except Cl_2, ClO_2, EtO, and HCl: Let the gas flow for 1 minute.

   For Cl_2 calibration gas: Let the gas flow for 3 minutes.

   For ClO_2 calibration gas: Let the gas flow for 6 minutes.

   For EtO calibration gas: Let the gas flow for 1.5 minutes.

   For HCl calibration gas: Let the gas flow for 5 minutes.

9. Use the ADD and SUB buttons to finish adjusting the reading on the screen to match the concentration listed on the calibration cylinder.

   For detectors using a surrogate gas, adjust the reading to match the surrogate gas concentration multiplied by the factor listed in Table 9 on page 50. Some versions will have to be set above full scale.

   NOTE: Even if the reading does not need adjustment to match the calibration cylinder's concentration, you must adjust it up and then back down to reset the Cal field in the Zero/Calibration Timer Information screen.

10. When calibration is complete, remove the calibration cup from the sensor housing and reinstall the rain guard if removed in Step 3.

11. Use the MENU button to scroll to the Alarm Settings screen. See page 55 for Alarm Settings instructions.

Calibrating the Sensor (Auto Cal)

Either the Manual Cal screen or the Auto Cal screen appear, depending on how Calibration Method is set in the Product Settings and Configuration Menu (see page 39).

You should ONLY calibrate the sensor after completing the zero process.

NOTE: O_2 - If calibrating with 100% N_2, you must use Manual Cal. To calibrate using Auto Cal, a gas concentration between 10 and 18% O_2 is recommended.

AsH_3 and HF - It is recommended that AsH_3 and HF versions only be calibrated using Manual Cal.

Calibration Frequency

A calibration should be performed EVERY thirty (30) days. Days since the last calibration should NEVER exceed ninety (90) days. RKI recommends that you calibrate your device regularly to ensure proper functionality and a safe work environment.

Materials

- 0.5 LPM fixed flow regulator with knob and calibration tubing

WARNING: ***If calibrating with Cl_2 or HCl, a regulator must be dedicated for use with that gas only. Do not use that dedicated regulator for any other gases, particularly H_2S.***

- calibration cup
- calibration cylinder or gas generator (For O_2 sensors, RKI recommends using 10-18% O_2. For all other sensors, RKI recommends using 50% of the full scale value of your detected gas.)

NOTE: Some detected gases use surrogate gases for calibration. Detected gases needing a surrogate gas for calibration are listed below. If you are using a surrogate gas for calibration, that surrogate gas concentration multiplied by the factor listed below should equal about 50% of the detected gas' full scale.

Table 10: Surrogate Calibration Gases

Detected Gas	Surrogate Calibration Gas	Factor
Arsine (AsH_3)	Phospine (PH_3)	1.4
Chlorine Dioxide (ClO_2)	Chlorine (Cl_2)	1
Formaldehyde (CH_2O)	Carbon Monoxide (CO)	0.2
Hydrogen Fluoride (HF)	Chlorine (Cl_2)	7.5
Ozone (O_3)	Chlorine (Cl_2)	0.8
	Nitrogen Dioxide (NO_2)	1

Procedure

1. For EtO calibration gas: Connect the tubing to the regulator, turn the regulator on, and allow gas to flow for **1 minute** before proceeding.

   For HCl calibration gas: Connect the tubing to the regulator, turn the regulator on, and allow gas to flow for **10 minutes** before proceeding.

2. If you followed the instructions in Zeroing the Sensor (20.9% for O_2), the screen below is displayed.

   If you are accessing Auto Cal from Normal Operating Mode, press MENU twice.

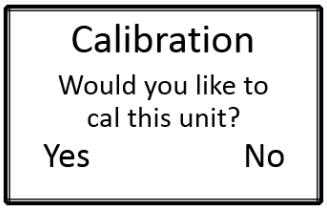

3. Press the ADD button to select “Yes” to begin the calibration process and to advance to the calibration confirmation screen. If you do not wish to calibrate the sensor, press the SUB button to select “No” to advance to the sensor radio address setting screen.

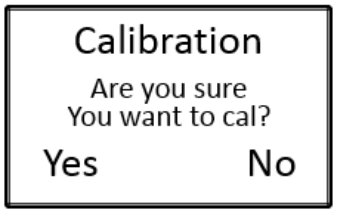

4. Press the ADD button to select “Yes” to confirm that you want to calibrate the sensor and to continue to the concentration setting screen. If you do not wish to continue to calibrate the sensor, press the SUB button to select “No” to advance to the sensor radio address setting screen.

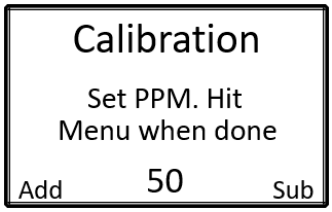

5. Use the ADD and SUB buttons to adjust the concentration match the concentration shown on the calibration cylinder.

   For detectors using a surrogate gas, adjust the reading to match the surrogate gas concentration multiplied by the factor listed in Table 10 on page 52.

6. Press the MENU button to save the gas concentration setting and to advance to the calibration start screen.

7. If a rain guard is installed, unscrew and remove it from the assembly.
8. Install the calibration cup to the T3A’s sensor housing.
9. Use the sample tubing to connect the regulator to the calibration cup.
10. For toxic gas cylinders, like Cl_2, it is important to vent the regulator while installing it onto the cylinder. Open the regulator by turning the knob counterclockwise and install it onto the cylinder.

WARNING: Be sure to use a breathing apparatus and to ventilate the area well when calibrating with high concentrations of toxic gases.

---

11. Press the MENU button to begin calibrating the sensor. The unit automatically begins the calibration process. During calibration, the display shows a countdown of the time remaining until the process is complete. The amount of time varies based on the gas type.

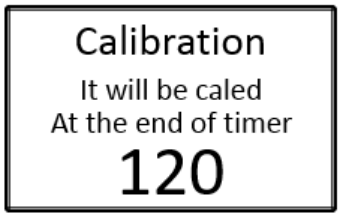

NOTE: Once the calibration countdown has started, the process cannot be stopped without disconnecting the power from the unit.

12. When calibration is complete, remove the calibration cup from the sensor housing and reinstall the rain guard if removed in Step 7.

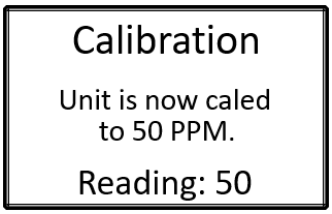

NOTE: If the sensor responds extremely slow, or does not respond to the applied gas, it may indicate a failed sensor element. The sensor element will need to be replaced before completing the zero and calibration process.

13. Turn the regulator knob clockwise to close the regulator.
14. Use the MENU button to scroll through to the Alarm Settings screen.

Sensor Alarm Settings

The T3A has two alarm settings: Alarm 1 and Alarm 2. Regardless of whether the device includes the optional two dry-contact relays, the system alarm settings are available on the device. All alarm set-points are field adjustable from the lowest increment up to 70% of the full scale gas concentration. The Alarm 1 set-point should NEVER be programed to a higher setting than the Alarm 2 set-point.

Both alarms are configurable to activate on either an increasing or decreasing level of gas. The factory default setting is to activate when the detected gas increases above the alarm set-point.

When the gas concentration detected at the sensor meets or exceeds the Alarm 1 set-point, the Alarm 1 indicator LED will illuminate amber. When the gas level meets or exceeds the Alarm 2 set-point, the Alarm 2 indicator LED will illuminate red. The alarm indicator LEDs will not switch off until the gas level reading at the sensor has fallen 10% below the alarm set-points or until the alarm is manually reset at the device, dependent upon the relay latching/auto reset settings.

If the device includes the optional two dry-contact relays, Relay 1 and Relay 2, the Alarm 1 and Alarm 2 settings will control the wired relays, respectively. When external alarming devices, such as alarm lights (visual) and horns (audio) are wired to the device, as the alarm set-points are reached, the relays will become activated as they are wired and programmed to perform.

Sensor Alarm 1 Setting

1. From normal operating mode, press and release MENU until the Alarm 1 setting screen appears.

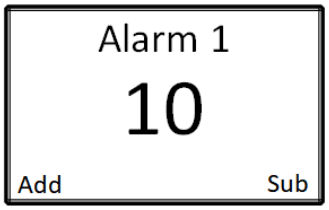

2. Use the ADD and SUB buttons to increase and decrease the Alarm 1 set-point, respectively.
3. Press the MENU button to save the desired setting and to advance to the sensor Alarm 1 increasing/decreasing setting screen.

Sensor Alarm 1 Increasing/Decreasing Setting

1. From normal operating mode, press and release MENU until the Alarm 1 increasing/decreasing setting screen appears.

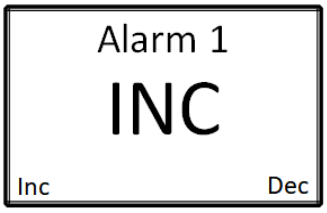

2. Use the ADD and SUB buttons to select between activation on an Increasing or Decreasing gas level, respectively.

3. Press the MENU button to save the desired setting and to advance to the sensor Alarm 2 setting screen.

Sensor Alarm 2 Setting

1. From normal operating mode, press and release MENU until the Alarm 2 setting screen appears.

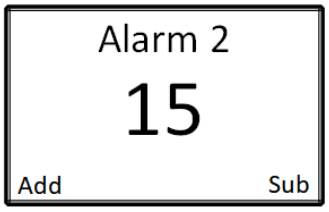

2. Use the ADD and SUB buttons to increase and decrease the Alarm 2 set-point, respectively.
3. Press the MENU button to save the desired setting and to advance to the sensor Alarm 2 increasing/decreasing setting screen.

Sensor Alarm 2 Increasing/Decreasing Setting

1. From normal operating mode, press and release MENU until the Alarm 2 increasing/decreasing setting screen appears.

2. Use the ADD and SUB buttons to select between activation on an Increasing or Decreasing gas level, respectively.
3. Press the MENU button to save the desired setting and to return to Normal Operating Mode.

NOTE: The alarms will NOT activate, even in the presence of gas, until you have been out of the Operation Settings menu for 1 minute. For auto resetting alarms, the alarms will NOT deactivate until the gas level reading at the sensor has fallen 10% below the alarm set-point.

Maintenance

RKI recommends that our equipment be calibrated a MINIMUM of every 90 days, and STRONGLY advise that calibration be performed every 30 days. Without knowing the specific application, sensor assembly location, gas exposure and other factors, the company recommends monthly calibrations – assuming no damage or potential damage has occurred to the sensor and that there has not been a power outage to the sensor assembly. If damage has occurred or the power supplied to the sensor has changed, a calibration should be completed immediately.

Scheduled maintenance should include the zero and calibration of the sensor (see page 47) and an alarm test (see page 33).

The sensor head should be kept free of airborne particles, dirt, mud, spider webs, bugs and insects, and/or any other debris that could potentially cover or coat the sensor. Keeping the sensor head clear of foreign articles will allow for proper operation of the device. A brief inspection during scheduled maintenance should suffice, but dependent upon the location and the environment in which the unit is installed, more frequent inspections may be warranted.

The T3A may be adversely affected by the exposure to certain airborne substances. Loss of sensitivity or corrosion may be gradual, if such materials are present in sufficient concentrations. The performance of the device may be impaired during operation in the presence of substances that can cause corrosion on gold plating. Continuous and high concentrations of corrosive gases may also have a detrimental long-term effect on the product's service life. The presence of such substances in an area does not preclude the use of this device, but the likelihood of the shortened lifetime of the sensor element, as a result, should be noted. Use of the T3A in these environments may require more frequently scheduled maintenance to ensure safe and reliable system performance.

Troubleshooting

The troubleshooting guide describes symptoms, probable causes, and recommended action for problems you may encounter with the T3A.

NOTE: This troubleshooting guide describes T3A problems only. See the controller operator's manual for problems you may encounter with the controller.

Table 11: T3A Fault Codes

Problem	Cause(s)	Solution(s)
F1 Check Sensor Cable	The control board has lost communication with the digital sensor interface adapter board.	1. Check connection between the sensor housing connector header and the digital sensor interface adapter board plug-in. 2. Replace the sensor interface adapter board
F4 Check Sensor Board	The control board has lost communication with the sensor interface board.	1. Replace the sensor interface board.

Table 11: T3A Fault Codes

F5 Try to Zero Again	The unit did not zero correctly, due to: • the presence of gas, • a sensor error, or • a sensor interface board error.	1. Re-zero the device in clear air. 2. Replace the sensor element. 3. Replace the sensor interface board.
F6 Try to Calibrate Again	The unit did not calibrate correctly, due to: • the absence of gas, • a sensor error, or • a sensor interface board error.	1. Recalibrate the sensor element and verify that gas is present during calibration. 2. Replace the sensor element. 3. Replace the sensor interface board.
* System faults will activate the fault terminal on the device.		

Replacing the Desiccant

Each T3A comes with a desiccant bag installed in the junction box. The contents are blue when it is dry. As the desiccant absorbs moisture, it turns amber. Periodically check the desiccant and replace it if it has turned amber.

Replacing Catalytic Type Sensors

RKI recommends replacing the sensor element board whenever a slow response to gas is observed during the normal calibration process. After replacing the sensor element board, the device MUST be zeroed and calibrated for proper operation of the device.

WARNING: ***Do not remove the sensor housing cap or enclosure lid while the circuits are energized unless the area is determined to be non-hazardous. Keep the sensor housing cap and enclosure lid tightly closed during operation.***

CAUTION: *The internal components can be static sensitive. Use caution when opening the enclosure and handling internal components. DO NOT use any metal objects or tools to remove the sensing element from the sensor adapter board.*

1. Press and hold the SUB button for approximately 6 seconds, until “OFF” shows on the display screen.
2. Unscrew and remove the rain guard from the assembly.

3. Unscrew and remove the sensor housing cap from the sensor housing base. Set aside.

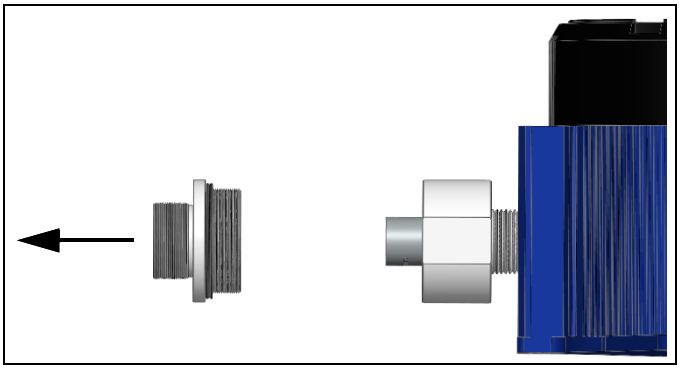

4. Unscrew and remove the old sensor element board. Keep the removed screws.

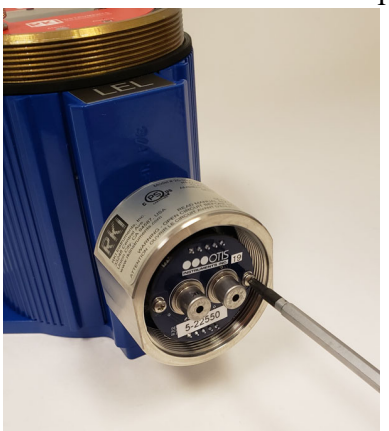

5. Install the new sensor element board. Ensure that the pins on the new sensor element board align with the sockets on the sensor housing board.

6. Secure the new sensor element board with the screws removed in Step 4.

7. Screw the sensor housing cap back onto the sensor housing base, ensuring that the sensor housing cap is only tightened hand tight.

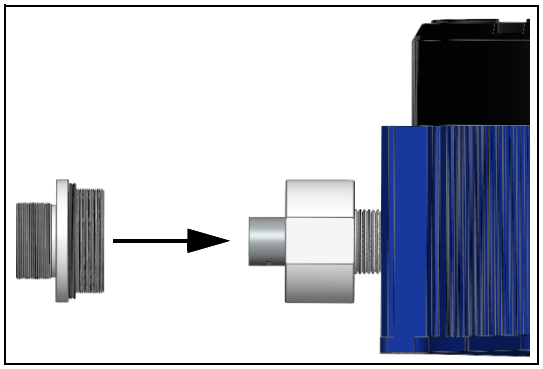

8. Press the ADD button to turn the T3A on.
9. Allow the detector to warm up for 10 minutes.
10. Zero and calibrate the detector as described on page 47.

Replacing Non-Catalytic Type Sensors

RKI recommends replacing the sensor element whenever a slow response to gas is observed during the normal calibration process. After replacing the sensor element, the device MUST be zeroed and calibrated for proper operation of the device.

WARNING: ***Do not remove the sensor housing cap or enclosure lid while the circuits are energized unless the area is determined to be non-hazardous. Keep the sensor housing cap and enclosure lid tightly closed during operation.***

CAUTION: *The internal components can be static sensitive. Use caution when opening the enclosure and handling internal components. DO NOT use any metal objects or tools to remove the sensing element from the sensor adapter board.*

---

1. Press and hold the SUB button for approximately 6 seconds, until “OFF” shows on the display screen.
2. If a rain guard is installed, unscrew and remove it from the assembly.
3. Unscrew and remove the sensor housing cap from the sensor housing base. Set aside.

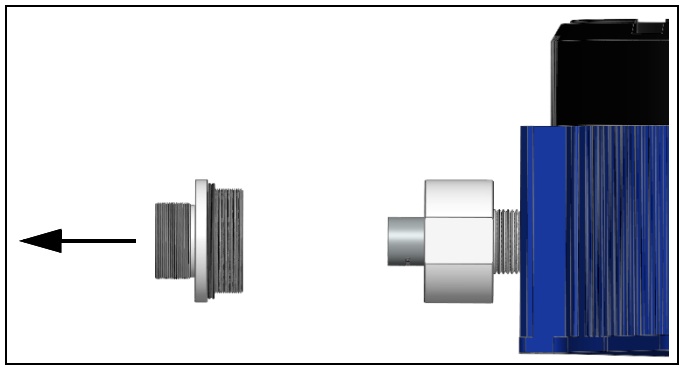

4. Gently unplug the sensor element from the sensor housing board.

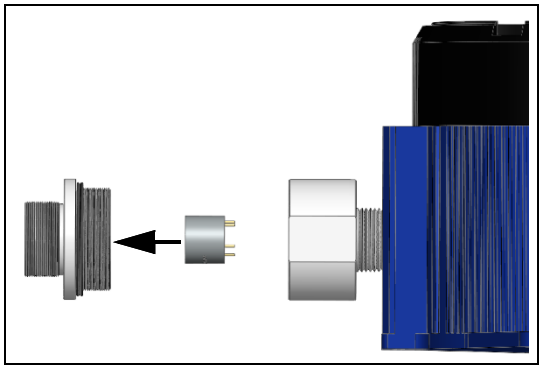

5. Plug the new sensor element into the sensor housing board. Ensure that the pins on the sensing element align with the sockets on the sensor housing board.

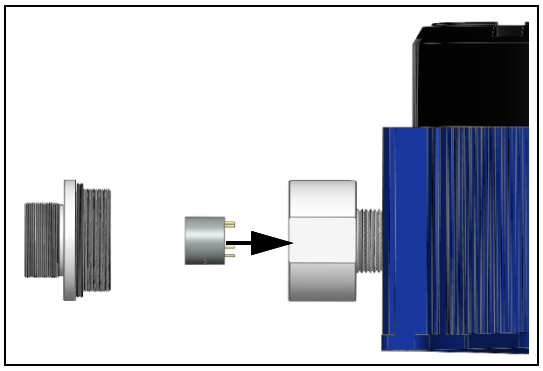

6. Screw the sensor housing cap back onto the sensor housing base, ensuring that the sensor housing cap is only tightened hand tight.

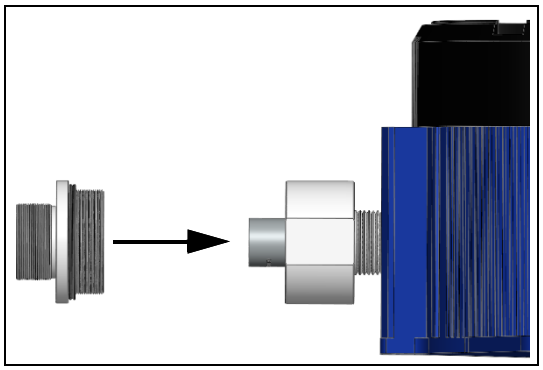

7. Press the ADD button to turn the T3A on.

8. Allow the detector to warmup for the appropriate amount of time as shown below, depending on the sensor type.

Detection Gas	Warmup Time
Ammonia (NH_3)	12 hours
Arsine (AsH_3)	2 hours
Carbon Dioxide (CO_2)	10 minutes

Detection Gas	Warmup Time
Carbon Monoxide (CO)	2 hours
Chlorine (Cl_2)	
Chlorine Dioxide (ClO_2)	
Combustible Gas	10 minutes
Ethylene Oxide (EtO)	48 hours
Formaldehyde (CH_2O)	10 minutes
Hydrogen (H_2)	2 hours
Hydrogen Chloride (HCl)	12 hours
Hydrogen Cyanide (HCN)	
Hydrogen Fluoride (HF)	2 hours
Hydrogen Sulfide (H_2S)	
Nitric Oxide (NO)	72 hours
Nitrogen Dioxide (NO_2)	2 hours
Oxygen (O_2)	
Ozone (O_3)	
Phosphine (PH_3)	
Sulfur Dioxide (SO_2)	

9. Zero and calibrate the detector as described on page 47.

Replacing the Fuse

WARNING: ***Do not remove the sensor housing cap or enclosure lid while the circuits are energized unless the area is determined to be non-hazardous. Keep the sensor housing cap and enclosure lid tightly closed during operation.***

CAUTION: *The internal components can be static sensitive. Use caution when opening the enclosure and handling internal components. DO NOT use any metal objects or tools to remove the fuses.*

1. Disconnect or turn off power to the T3A.
2. Unscrew the enclosure lid and set it aside.
3. Grab the thumbscrews and gently lift the internal system out of the enclosure. It can rest on the edge of the enclosure.

NOTE: Disconnecting the sensor connector plug from the sensor housing will allow for the complete removal of the internal system from the device enclosure. Disconnecting the internal system may provide ease in accessing the control board terminals for wiring. Reconnect the sensor connector plug before reinstalling the internal system.

4. Locate the fuse that needs to be replaced.

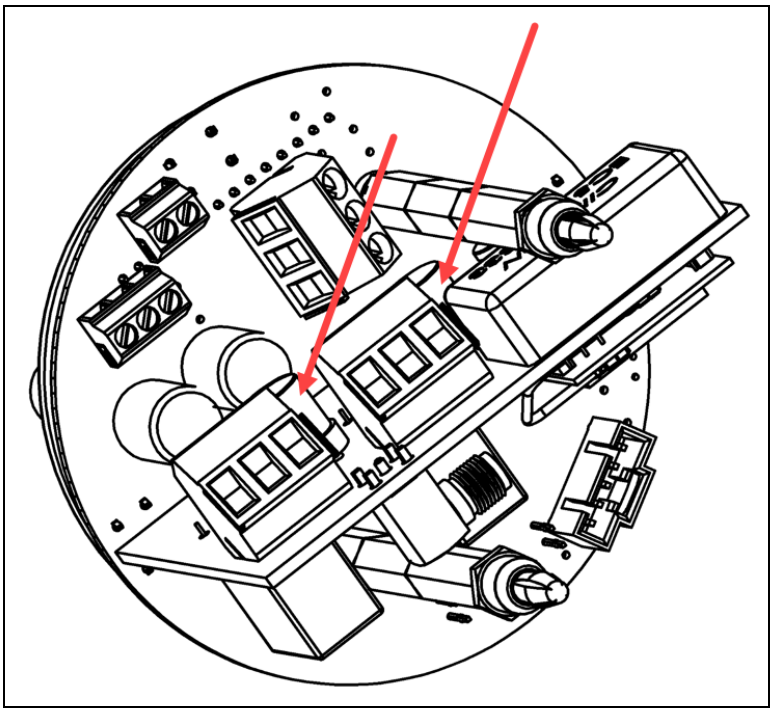

5. Pull the old fuse straight out.
6. Align the pins on the replacement fuse with the sockets in the fuse holder.

7. Push the new fuse into the fuse holder.
8. Place the internal system back into the enclosure, matching each mounting post to its corresponding eyelet anchored within the base of the enclosure.
9. Using the thumbscrews, gently push to seat the internal system into the mounting posts.

NOTE: The thumbscrews on the T3A function **ONLY** as thumb-holds for ease in removal of the internal system from the base of the enclosure. Do **NOT** attempt to loosen or tighten the thumbscrews when opening or closing the enclosure.

---

10. Verify that the sealing ring, seated at the threaded opening of the device enclosure, is correctly in place.
11. Secure the enclosure lid back onto the enclosure.

WARNING: ***When securing the lid onto the device, tighten the enclosure lid by hand ONLY. Overtightening of the lid by use of hand-tools could result in damage to the O-ring, potentially compromising the moisture seal, resulting in an unsafe environment.***

Parts List

Table 12 lists replacement parts and accessories for the T3A.

Table 12: Parts List

Part Number	Description
09-0300RK	Desiccant bag
43-4163	Fuse, 4A
47-5110-5-XX	Cable with connector for remote-mounted kit (specify length in 1-foot increment when ordering; maximum lengths listed on page 8), 5-pin
61-2001	Remote sensor mounting kit, 5-pin explosion-proof
66-0001	Sensor, carbon monoxide (CO), for up to 1,000 ppm full scale
66-0002	Sensor, oxygen (O_2), 25% volume full scale
66-0003-1	Sensor, hydrogen sulfide (H_2S), for up to 100 ppm full scale
66-0003-2	Sensor, hydrogen sulfide (H_2S), for 200 to 2,000 ppm full scale
66-0004-1	Sensor, hydrogen chloride (HCl), for up to 20 ppm full scale
66-0004-2	Sensor, hydrogen chloride (HCl), for up to 100 ppm full scale
66-0005	Sensor, hydrogen cyanide (HCN), 50 ppm full scale
66-0006N-1	Sensor, ammonia (NH_3), for up to 100 ppm full scale
66-0006N-2	Sensor, ammonia (NH_3), for 200 to 1,000 ppm full scale
66-0007	Sensor, nitric oxide (NO), for up to 250 ppm full scale
66-0008	Sensor, nitrogen dioxide (NO_2), 20 ppm full scale
66-0009-1	Sensor, ozone (O_3), for up to 5 ppm full scale
66-0009-2	Sensor, ozone (O_3), for 10 to 100 ppm full scale
66-0010	Sensor, sulfur dioxide (SO_2), 20 ppm full scale
66-0011	Sensor, formaldehyde (CH_2O), 10 ppm full scale
66-0012	Sensor, chlorine (Cl_2), for up to 20 ppm full scale
66-0013	Sensor, chlorine dioxide (ClO_2), for up to 5 ppm full scale
66-0014	Sensor, hydrogen fluoride (HF), 10 ppm full scale
66-0015	Sensor, phosphine (PH_3), 5 ppm full scale
66-0016	Sensor, ethylene oxide (EtO), for up to 10 ppm full scale

Table 12: Parts List

Part Number	Description
66-0039	Sensor, hydrogen (H_2), 100% LEL full scale
66-0040	Sensor, combustible gas, catalytic type, 100% LEL full scale
66-0050	Sensor, carbon dioxide (CO_2), IR type, 5.0% volume full scale
66-0051	Sensor, combustible gas (CH_4), IR type, 100% LEL full scale
66-0052	Sensor, combustible gas (CH_4), IR type, 100% volume full scale
66-0053	Sensor, combustible gas (HC), IR type, 100% LEL full scale
66-0054	Sensor, carbon dioxide (CO_2), 5,000 ppm full scale
66-0068	Sensor, arsine (AsH_3), 1.00 ppm full scale
71-0533	T3A Operator's Manual (this document)
81-0002RK-01	Calibration cylinder, 2% volume (50% LEL) hydrogen in air, 34 liter steel
81-0002RK-03	Calibration cylinder, 2% volume (50% LEL) hydrogen in air, 103 liter
81-0004RK-01	Calibration cylinder, 50% LEL propane in air, 34 liter steel
81-0004RK-03	Calibration cylinder, 50% LEL propane in air, 103 liter
81-0007RK-01	Calibration cylinder, 15% LEL hexane in air, 34 liter steel
81-0010RK-01	Calibration cylinder, 10% LEL (5000 ppm) methane in air, 34 liter steel
81-0010RK-03	Calibration cylinder, 10% LEL (5000 ppm) methane in air, 103 liter
81-0012RK-01	Calibration cylinder, 50% LEL methane in air, 34 liter steel
81-0012RK-03	Calibration cylinder, 50% LEL methane in air, 103 liter
81-0013RK-01	Calibration cylinder, 50% volume methane in nitrogen, 34 liter steel
81-0013RK-05	Calibration cylinder, 50% volume methane in nitrogen, 58 liter
81-0064RK-01	Calibration cylinder, 50 ppm CO in air, 34 liter steel
81-0064RK-03	Calibration cylinder, 50 ppm CO in air, 103 liter
81-0069RK-01	Calibration cylinder, 200 ppm CO in air, 34 liter steel
81-0069RK-03	Calibration cylinder, 200 ppm CO in air, 103 liter
81-0070RK-01	Calibration cylinder, 2000 ppm CO_2 in nitrogen, 34 liter steel
81-0070RK-03	Calibration cylinder, 2000 ppm CO_2 in nitrogen, 103 liter
81-0072RK-01	Calibration cylinder, 2.5% CO_2 in air, 34 liter steel

Table 12: Parts List

Part Number	Description
81-0072RK-03	Calibration cylinder, 2.5% CO_2 in air, 103 liter
81-0076RK	Zero air calibration cylinder, 17 liter
81-0076RK-01	Zero air calibration cylinder, 34 liter steel
81-0076RK-03	Zero air calibration cylinder, 103 liter
81-0078RK-01	Calibration cylinder, 100% nitrogen, 34 liter steel
81-0078RK-03	Calibration cylinder, 100% nitrogen, 103 liter
81-0146RK-02	Calibration cylinder, 200 ppm H_2S in nitrogen, 58 liter
81-0149RK-02	Calibration cylinder, 5 ppm H_2S in nitrogen, 58 liter
81-0149RK-04	Calibration cylinder, 5 ppm H_2S in nitrogen, 34 liter aluminum
81-0150RK-02	Calibration cylinder, 10 ppm H_2S in nitrogen, 58 liter
81-0150RK-04	Calibration cylinder, 10 ppm H_2S in nitrogen, 34 liter aluminum
81-0151RK-02	Calibration cylinder, 25 ppm H_2S in nitrogen, 58 liter
81-0151RK-04	Calibration cylinder, 25 ppm H_2S in nitrogen, 34 liter aluminum
81-0170RK-02	Calibration cylinder, 5 ppm SO_2 in nitrogen, 58 liter
81-0170RK-04	Calibration cylinder, 5 ppm SO_2 in nitrogen, 34 liter aluminum
81-0174RK-02	Calibration cylinder, 50 ppm NH_3 in nitrogen, 58 liter
81-0176RK-02	Calibration cylinder, 25 ppm NH_3 in nitrogen, 58 liter
81-0176RK-04	Calibration cylinder, 25 ppm NH_3 in nitrogen, 34 liter aluminum
81-0180RK-02	Calibration cylinder, 10 ppm NO_2 in nitrogen, 58 liter
81-0180RK-04	Calibration cylinder, 10 ppm NO_2 in nitrogen, 34 liter aluminum
81-0181RK-02	Calibration cylinder, 25 ppm NO in nitrogen, 58 liter
81-0181RK-04	Calibration cylinder, 25 ppm NO in nitrogen, 34 liter aluminum
81-0185RK-02	Calibration cylinder, 0.5 ppm PH_3 in nitrogen, 58 liter
81-0185RK-04	Calibration cylinder, 0.5 ppm PH_3 in nitrogen, 34 liter aluminum
81-0190RK-02	Calibration cylinder, 5 ppm Cl_2 in nitrogen, 58 liter
81-0190RK-04	Calibration cylinder, 5 ppm Cl_2 in nitrogen, 34 liter aluminum
81-0192RK-02	Calibration cylinder, 2 ppm Cl_2 in nitrogen, 58 liter

Table 12: Parts List

Part Number	Description
81-0192RK-04	Calibration cylinder, 2 ppm Cl_2 in nitrogen, 34 liter aluminum
81-0194RK-02	Calibration cylinder, 10 ppm HCl in nitrogen, 58 liter
81-0196RK-02	Calibration cylinder, 10 ppm HCN in nitrogen, 58 liter
81-0196RK-04	Calibration cylinder, 10 ppm HCN in nitrogen, 34 liter aluminum
81-1050RK	Regulator with gauge and knob, 0.5 LPM, for 17 liter and 34 liter steel calibration cylinders (cylinders with external threads)
81-1051RK	Regulator with gauge and knob, 0.5 LPM, for 34 liter aluminum, 58 liter, and 103 liter calibration cylinders (cylinders with internal threads)
81-1183	Calibration cup with 3 foot tube
81-1184	Rain guard (shipped with O2, CO, H2S, CO2, and LEL detectors only)
81-9029RK-02	Calibration cylinder, 100 ppm NH_3 in N_2, 58 liter
81-9029RK-04	Calibration cylinder, 100 ppm NH_3 in N_2, 34 liter aluminum
81-9062RK-04	Calibration cylinder, 5 ppm EtO in air, 34 liter aluminum
81-9090RK-01	Calibration cylinder, 12% O_2 in N_2, 34 liter steel
81-9090RK-03	Calibration cylinder, 12% O_2 in N_2, 103 liter
82-0101RK	Magnetic wand
Z2000-CAPFILTER	Teflon filter for sensor housing assembly (for all gas types except Cl_2, ClO_2, and NH_3)

Appendix A: 4-20 mA Signal

This appendix is only an introduction. The information should serve as a brief overview of 4-20 mA current loop signal ranges and should not be considered a complete reference for proper implementation or use.

Industry standards pertaining to 4-20 mA current loop signals and other aspects of electronics are assumed to be known by the technician. For proper connection to a controller or Programmable Logic Controller (PLC), refer to the manufacturer's specific manual or instructions for that device.

Overview

When using 4-20 mA wired output signal devices, the 4-20 mA defines the current loop analog signal range, with 4 mA representing the lowest end of the range and 20 mA the highest. The relationship between the current loop and the gas value is linear. In addition, the T3A uses values below 4 mA to indicate special status conditions, as shown below:

Table 13: 4-20 mA Ranges

Current	Detector Status
2 mA	Sensor Fault
3 mA	Sensor in Menu Mode
3.5 mA	Sensor being Calibrated

The 4 mA allows the receiving controller/PLC to distinguish between a zero signal, a broken wire, or an unresponsive instrument. Benefits of 4-20 mA convention are that it is: an industry standard, low-cost to implement, can reject some forms of electrical noise, and the signal does not change value around the "loop" (as opposed to voltage). The key advantage of the current loop is that the accuracy of the signal is not affected by a potential voltage drop in the interconnected wiring. Even with significant resistance in the line, the current loop T3A will maintain the proper current for the device, up to its maximum voltage capability.

Only one current level can be present at any time. Each device that operates via a 4-20 mA current loop signal must be wired directly to the controller. Units that are wired in a daisy chain configuration for the 4-20 mA current loop signal will not properly transmit data communications to the controller.

Calculations

$$I_{(4\text{-}20)} = \left(\frac{(16)(\text{value})}{\text{scale}}\right) + 4$$

I(4-20) = Current of loop, measured in mA

value = ppm (or %) of gas concentration

scale = full scale of sensor

Table 14: Sensor Element Scale Ranges

Sensor Type	Gas Type	Formula	Range
Electrochemical (EC)	Hydrogen Sulfide	H2S	0-100 ppm
Electrochemical (EC)	Hydrogen Sulfide (High Range)	H2S2K	0-2000 ppm
Electrochemical (EC)	Sulfur Dioxide	SO2	0-20 ppm
Electrochemical (EC)	Oxygen	O2	0-25%
Electrochemical (EC)	Carbon Monoxide	CO	0-1000 ppm
Electrochemical (EC)	Chlorine	CL2	0-20 ppm
Electrochemical (EC)	Hydrogen Chloride	HCL	0-30 ppm
Electrochemical (EC)	Ammonia	NH3	0-100 ppm
Electrochemical (EC)	Ammonia (Medium Range)	NH3300	0-300 ppm
Electrochemical (EC)	Ammonia (High Range)	NH3A	0-1000 ppm
Electrochemical (EC)	Hydrogen	H2	0-4% volume
Electrochemical (EC)	Chlorine Dioxide	CLO2	0-1 ppm
Electrochemical (EC)	Hydrogen Cyanide	HCN	0-50 ppm
Electrochemical (EC)	Nitrogen Dioxide	NO2	0-20 ppm
Electrochemical (EC)	Phosphine	PH3	0-5 ppm
Infrared (IR)	Carbon Dioxide	CO2	0-5%
Infrared (IR)	Combustible Gas	LEL	0-100% LEL
Catalytic Bead (CB2)	Combustible Gas	LEL	0-100% LEL

Actual ranges may vary with our product. For inquiries beyond the information and instructions provided, contact the sales representative of this product for assistance.

Measuring Current

If the value measured is 0 mA, then: the loop wires are broken, the sensor assembly is not powered up, the sensor assembly is malfunctioning, or the controller is malfunctioning. A digital multi-meter (DMM), or current meter, may be used in conjunction with the controller and/or to test the 4-20 mA current loop signal. To measure the current, place the meter probes in line with the current loop.

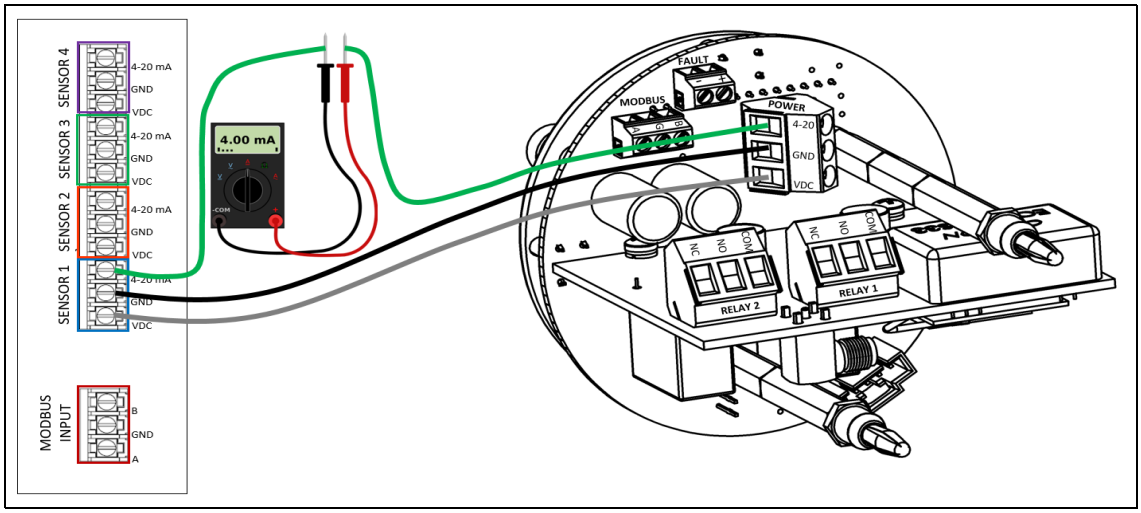

Appendix B: Modbus Communications

RKI controllers have the capability of accepting Modbus sensor inputs for data communications with T3A series detectors. Modbus is a communication protocol that uses an RS-485 serial connection, and can accept a number of different devices.

Based on the type of circuit used, there is a limit on how many devices that can be connected to a Modbus sensor network. RKI controllers currently allow a maximum of 64 devices on a single network. The data is transferred along the Modbus network at a specified Modbus baud, or rate of speed. Though small, networks that have a high number of devices connected will incur a small, proportional delay in the communication transfer of data.

Wiring Configurations

A daisy chain is a wiring scheme in which multiple devices are wired together in a sequence, or in a ring. Daisy chains may be used for power, analog signals, digital data, or a combination thereof. For the purposes of the T3A, the term daisy chain refers to multiple devices connected in a series to form a single long line of devices, connected via the wiring patterns embedded within each device.

Twisted pair cabling is a type of wiring in which two conductors of a single circuit are twisted together for the purposes of canceling out electromagnetic interference (EMI) from external sources as well as “crosstalk” between neighboring pairs. In electronics, crosstalk is any phenomenon by which a signal transmitted on one circuit or channel of a transmission system creates an undesired effect in another circuit or channel. The T3A requires twisted pairs for all wired Modbus connections.

Twisted pair cables are often shielded in an attempt to further prevent EMI. Electromagnetic shielding provides an electric conductive barrier to attenuate electromagnetic waves external to the shield and provides a conduction path by which induced currents can be circulated and return to the source, via ground reference connection. These cables are referred to as shielded twisted pairs (STP) and are recommended for operation areas with high noise levels.

Proper Connection

The distance of the Modbus connection from the gas detection device to the controller cannot exceed 4,000 feet. In the instance of daisy-chained devices, this applies to the last sensor connected on the line. Connection distances of 100 feet, or less, require 22 to 24 gauge wire. Connection distances that range more than 100 feet require 18 to 20 gauge wire.

For more information on properly wiring a daisy chain network of devices for Modbus, consult the following diagram.

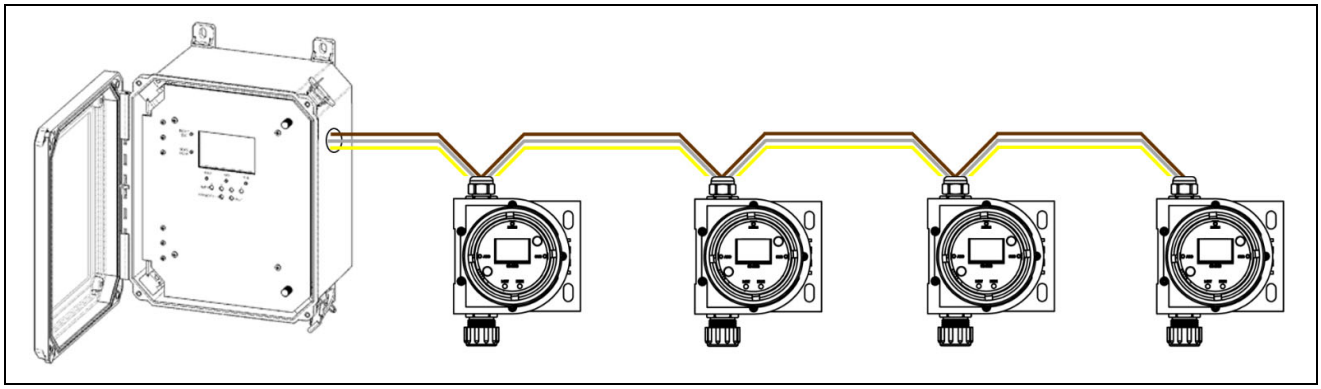

The signal wire of each unit is run to the signal terminal of the neighboring sensor. With each device connected to the previous device via the signal wire, a “chain” is created, with the first device in the chain directly connected to the controller.

Table 15: RS-485 Modbus Connection Distances for Electrical Wiring

Distance	Length	Gauge Size	Twisted Pairs
Short	< 100 Feet	22 to 24 Gauge	Shielded, in areas of high noise
Medium	101 Feet to 1,000 Feet	18 to 20 Gauge	Shielded, in areas of high noise
Long*	1,000 Feet to 4,000 Feet	18 to 20 Gauge	Shielded, in areas of high noise

(*) Terminating resistor may be required for the last device in the daisy-chain.

Appendix C: Modbus Register Map

Register Address (Hex)	Register Address (Dec)	Data Description	R/W	Length	Unit	Valid Response(s)
1	1	Gas Reading	R	2	FLOAT	Numerical Gas Reading
3	3	Modbus Address	R	1	UINT	0 – 247
4	4	Gas Type	R	1	ENUM	0 – 26, see below
5	5	Unit Type	R	1	ENUM	0 – 1, see below
6	6	Major Revision	R	1	UINT	0 – 100
7	7	Minor Revision	R	1	UINT	0 – 9
8	8	Mode of Sensor	R	1	ENUM	0 – 7, see below
9	9	Voltage Reading	R	2	FLOAT	12V – 35V
B	11	Fault Code	R	1	ENUM	0 – 6, see below
C	12	Sensor Type	R	1	ENUM	0-4, see below
E†	14†	Relay 1 Setting	R	2	FLOAT	1 – 32000
10†	16†	Relay 2 Setting	R	2	FLOAT	1 – 32000
16	22	Precision	R	1	INT	0 – 3
17†	23†	Relay Setting	R	1	BFLD	See Relay Setting Table
18	24	Days Since Last Zero	R	1	UINT	0 – 60000 (>60000) Default to “Never”
19	25	Calibration Type	R	1	ENUM	0 – 1
1A	26	Auto-Calibration Value	R	2	FLOAT	Numerical Gas Reading
1C	28	Days Since Last Calibration	R	1	UINT	0-60000 (>60000) Default to “Never”
1E	30	Relay 1 State	R	1	INT	0 – Relay Inactive 1 – Relay Active
1F	31	Relay 2 State	R	1	INT	0 – Relay Inactive 1 – Relay Active
20	32	Relay 1 Reset	R/W	1	INT	Read as 0 Write 1 to reset Relay 1 state
21	33	Relay 2 Reset	R/W	1	INT	Read as 0 Write 1 to reset Relay 2 state

- Register Address 1: Hexadecimal numbers
- Register Address 2: Decimal numbers
- R/W: Read/Write capable data
- R: Read-only data
- FLOAT: Floating point number
- ENUM: Enumeration
- UINT: Unsigned integer
- INT: Integer
- BFLD: Bit Field
- (*): Limited by precision

T3A Modbus Register MAP Enumeration Keys

Register Address 4: Gas Type

Response	Gas Type
0	H2S – Hydrogen Sulfide
1	SO2 – Sulfur Dioxide
2	O2 – Oxygen
3	CO – Carbon Monoxide
4	CL2 – Chlorine
5	CO2 – Carbon Dioxide
6	LEL – Combustible Gas
7	VOC – Volatile Organic Compounds
9	HCL – Hydrogen Chloride
10	NH3 – Ammonia
12	CLO2 – Chlorine Dioxide
13	HCN – Hydrogen Cyanide
14	F2 - Fluorine
15	HF – Hydrogen Fluoride
16	CH2O - Formaldehyde
17	NO2 – Nitrogen Dioxide
18	O3 - Ozone
26	PH3 – Phosphine
27	HBr – Hydrogen Bromide
28	EtO – Ethylene Oxide
29	CH3SH – Methyl Mercaptan
30	AsH3 - Arsine

Register Address 5: Unit Type

Response	Unit Type
0	ppm
1	%

Register Address 8: Mode of Sensor

Response	Sensor Mode
0	Normal Operating Mode
1	Zero Mode
2	Calibration Mode
3	Alarm Test Mode
5	Diagnostic Mode
6	Advanced Mode
7	Administrator Mode

Register Address B/11: Fault Code

Response	Fault Type
0	No Fault
1	Loss of Communication with Sensor Board
4	Loss of Communication with Sensor Element/Housing
5	Zero Error
6	Calibration Error

Register Address C/12: Sensor Type

Response	Sensor Type
0	EC – Electrochemical
1	IR – Infrared
2	CB – Catalytic Bead
4	PID – Photo Ionization Detector

Register Address 17/23: Relay Setting

Bit	Relay Setting	Function
5	Relay 2: Increasing/ Decreasing Setting	0 – Decreasing
		1 - Increasing
4	Relay 1: Increasing/ Decreasing Setting	0 – Decreasing
		1 - Increasing
3	Relay 2: Failsafe Setting	0 – No (Off)
		1 – Yes (On)
2	Relay 1: Failsafe Setting	0 – No (Off)
		1 – Yes (On)
1	Relay 2: Latch/Auto Reset	0 – Auto Reset
		1 - Latch
0	Relay 1: Latch/Auto Reset	0 – Auto Reset
		1 – Latch

Register Address 19/25: Calibration Type

Response	Calibration Type
0	Manual Calibration
1	Auto Calibration